NATIONAL INSTITUTE OF PUBLIC HEALTH AND ENVIRONMENTAL PROTECTION BILTHOVEN, THE NETHERLANDS

Report nr. 715810 008

DERIVATION OF THE ECOTOXICOLOGICAL SERIOUS SOIL CONTAMINATION CONCENTRATION

substances evaluated in 1993 and 1994

G.H. Crommentuijn, R. Posthumus and D.F. Kalf

August 1995

This research was carried out on behalf of the Directorate General for Environmental Protection, Directorate for soil, in the framework of the project no. 715810.

MAILING LIST

1- 5	Directoraat-Generaal Milieubeheer, Directie Bodem, Mr. A.B. Holtkamp
6	Plv. Directeur-Generaal Milieubeheer, VROM, Dr.ir. B.C.J. Zoeteman
7	Plv. Directeur-Generaal Milieubeheer, Drs. P.E. de Jongh
8-150	Directoraat-Generaal Milieubeheer, Directie Bodem, Afdeling Bodemsanering; t.a.v. Dr. J.M. Roels
151	Drs. G.J.A. Al (DGM/DWL)
152	Dr. C. Plug (DGM/SVS)
153	Mr. A. Gravesteijn (DGM/Bo)
154	Ir. J.G. Robberse (DGM/Bo)
155	Drs. C.A.J. Denneman (DGM/Bo)
156	Dr. J.A. van Zorge (DGM/SVS)
157	Prof.Dr. C.J. van Leeuwen (DGM/SVS)
158	Dr. A.G.J. Sedee (DGM/SVS)
159	Dr. J.H.M. de Bruijn (DGM/SVS)
160	Ir. P. Verkerk (DGM/HIMH)
161	Dr. J.J. Vegter (TCB)
162	Dr.Ir. C.A.M. van Gestel (VU, Amsterdam)
163	Prof.Dr. N.M. van Straalen (VU, Amsterdam)
164	Dr. J.H. van Wijnen (GG&GD, Amsterdam)
165	Dr. W. Veerkamp (Shell)
166	Dr. W.F. ten Berge (DSM)
167	Dr. J.P. Knezovich (Lawrence Livermore National Laboratory)
168	Dr. K. Soga (Japan Forum for Soil Environmental Remediation)
169	Dr.Ing. E. Podlesakova (Research Institute for Soil and Water Conservation, Praha)
170	Dr. N. Horecna (VUCHT, Bratislavia)
171	Dr. H. Sloterdijk (Environment Canada)
172	Dr. S.C. Michaelidou (Ministry of Health, Cyprus)
173	Dr. C. Cornelis (VITO, Mol, Belgium)
174	Dr. M. Beaulieu (Environment Canada)
175	Depot van Nederlandse publikaties en Nederlandse bibliografie
176	Directie van het Rijksinstituut voor Volksgezondheid en Milieuhygiëne
177	Ir. N.D. van Egmond
178	Ir. F. Langeweg
179	Drs. L.H.M. Kohsiek
180	Dr. H.J.P. Eijsackers
181	Dr.Ir. J.G.M. Notenboom
182	Dr. L. Posthuma
183	Ing. P.J.C.M. Janssen
184	Dr.ir. F.A. Swartjes
185	Dr. F.J.J. Brinkmann
186	Ir. J.J.G. Kliest
187	Drs. P. Lagas
188	Ir. A.M.A. van der Linden

189	Dr. ir.J.J.M. van Grinsven
190	Drs. M.F.W. Waitz
191	Drs. ing. P.Kreule
192-197	auteurs
198	Hoofd Bureau Voorlichting en Public Relations
199	Bureau Projecten- en Rapportenregistratie
200-201	Bibliotheek RIVM
202	Bibliotheek LBG
203	Bibliotheek ACT
204-300	Reserve-exemplaren t.b.v. Bureau Rapportenbeheer

TABLE OF CONTENTS

SUMMARY

The intervention value for soil clean-up is based on the integration of a separately derived human toxicological serious soil contamination concentration or HUMAN-SCC as well as an ecotoxicological serious soil contamination concentration or ECOTOX SCC. In this ECOTOX SCCs for substances evaluated in 1993 and 1994 (or the second and third series of substances) are proposed. The methodology used is described in a number of earlier published reports. The proposed ECOTOX SCCs are listed in the table below.

Proposals for ecotoxicological serious soil contamination concentrations (ECOTOX SCCs) in mg/kg standard soil (=soil containing 10% organic matter and 25% clay) for substances evaluated in 1993 or second series of substances

Second series of substances	*ECOTOX SCC (mg/kg)*
I Metals and trace elements	
antimony	2890
beryllium	29.1
boron	7.0
V Chlorinated hydrocarbons	
dioxine (2,3,7,8-TCDD)*	0.046
VI Pesticides	
chlordane	5.44
heptachlor	1.01
endosulfan	7.14
tributyltin oxide	0.48
fentinacetate	5.14
azinphos methyl	1.53
VII Other pollutants	
methylethylketon	175

* Evaluation of dioxine took place in 1993. Because new data have become available the ECOTOX SCC for dioxine will be re-evaluated.

Proposals for ecotoxicological serious soil contamination concentrations (ECOTOX SCCs) in mg/kg standard soil (=soil containing 10% organic matter and 25% clay) for substances evaluated in 1994 or third series of substances

Third series of substances	*ECOTOX SCC (mg/kg)*
I Metals and trace elements	
silver	15
III Aromatic compounds	
dodecylbenzene	-
1,2,3-trimethylbenzene	240
1,2,4-trimethylbenzene	192
1,3,5-trimethylbenzene	202
1,2,3,4-tetramethylbenzene	321
1,2,3,5-tetramethylbenzene	325
1,2,4,5-tetramethylbenzene	397
V Chlorinated hydrocarbons	
1,1-dichloroethane	42
1,1,1-trichloroethane	88
1,2-dichloroethene (*cis en trans*)	238
VII Other pollutants	
ethylene glycol	90
diethylene glycol	450000
acrylonitrile	1.3
formaldehyde	0.30
methanol	33
butanol	26
butylacetate	95
methyl *tert*-butyl ether	125

SAMENVATTING

De interventiewaarde voor bodemsanering is gebaseerd op de integratie van een humaan toxicologisch ernstige verontreinigings bodem concentratie of humane-EVBC en ecotoxicologische ernstige bodemverontreinings concentratie of ecotox-EVBC. In dit rapport zijn voorstellen voor eco-EVBC's gedaan voor stoffen die in 1993 en 1994 zijn geëvalueerd. De methodologie is beschreven in een serie eerder gepubliceerde rapporten. De voorgestelde waarden zijn opgenomeen in de hieronder gegeven tabellen.

Voorstel voor ecotoxicologische ernstige bodemverontreinigings concentraties (eco-EVBC's) in mg/kg standaard bodem (=bodem met 10% organisch materiaal en 25% klei) voor stoffen geëvalueerd in 1993 of tweede serie stoffen

Tweede serie stoffen	eco-EVBC *(mg/kg)*
I Metalen en spore elementen	
antimoon	2890
beryllium	29.1
boron	7.0
V Gechloreerde koolwaterstoffen	
dioxine (2,3,7,8-TCDD)*	0.046
VI Pesticiden	
chlordane	5.44
heptachlor	1.01
endosulfan	7.14
tributyltin oxide	0.48
fentinacetate	5.14
azinphos methyl	1.53
VII Overigen	
methylethylketon	175

* Dioxine is in 1993 geëvalueerd. Omdat er afgelopen jaren nieuwe informatie betreffende dioxine is gepubliceerd zal deze stof opnieuw worden geëvalueerd

Voorstel voor ecotoxicologische ernstige bodemverontreinigings concentraties (eco-EVBCs) in mg/kg standaard bodem (=bodem met 10% organisch materiaal en 25% klei) voor stoffen geëvalueerd in 1994 of derde serie stoffen

Derde serie stoffen	eco-EVBC *(mg/kg)*
I Metalen en spore elementen	
zilver	15
III Aromatische verbindingen	
dodecylbenzeen	-
1,2,3-trimethylbenzeen	240
1,2,4-trimethylbenzeen	192
1,3,5-trimethylbenzeen	202
1,2,3,4-tetramethylbenzeen	321
1,2,3,5-tetramethylbenzeen	325
1,2,4,5-tetramethylbenzeen	397
V Gechloreerde koolwaterstoffen	
1,1-dichloroethaan	42
1,1,1-trichloroethaan	88
1,2-dichloroetheen (*cis en trans*)	238
VII Overigen	
ethyleen glycol	90
diethylene glycol	450000
acrylonitrile	1.3
formaldehyde	0.30
methanol	33
butanol	26
butylacetate	95
methyl *tert*-butyl ether	125

1. INTRODUCTION

In the framework of the periodical revision of the Soil Protection Guidelines and incorporation of the Interim Soil Clean-Up Act in the Soil Protection Act of the Netherlands toxicologically based intervention values for soil clean-up- (formerly C-values) have been derived. The intervention value for soil clean-up is based on the integration of a separately derived human toxicological serious soil contamination criteria or HUM-TOX SCC as well as an ecotoxicological criterium for serious soil contamination or ECOTOX SCC (figure 1.1.). The approach has been developed in the past few years and is described in a number of RIVM-reports. All the reports published untill now are listed in Appendix I of this report.

The list of compounds for which an intervention value is available is far from complete at this moment. Every year a list of 'new' compounds is composed (a series of substances) for which an intervention value has to be derived. The present report deals with the ecotoxicological serious soil contamination criteria or ECOTOX SCCs for the compounds reviewed in the years 1993 and 1994. These compounds are referred to as the second- and third series of compounds and are listed in table 1.1. The classification of substances into groups is the same as the one proposed by Denneman and Van Gestel (1990). The procedure to derive the ECOTOX SCC is described in Crommentuijn et al. (1995) which is based on the procedure described by Denneman and Van Gestel (1990, 1991). For the substances listed in table 1.1. the HUM-TOX SCC is presented in Janssen et al. (1995) and the integration of the HUM-TOX SCC and the ECOTOX SCC into one intervention value for soil clean-up in Kreule et al. (1995).

In chapter 2 a short description of the method to derive the ECOTOX SCC is given. For a detailed description it is referred to Crommentuijn et al. (1995). Chapter 3 gives the ECOTOX SCC for the compounds listed in table 1.1. and the selected data used. The data are presented in Appendices II to VII:
Appendix II, toxicity data terrestrial species,
Appendix III, toxicity data microbial processes and enzymatic activity,
Appendix IV, toxicity data freshwater species,
Appendix V, toxicity data marine species and
Appendix VI, QSAR data
The literature from which the data were collected is shown in Appendix VII (References).

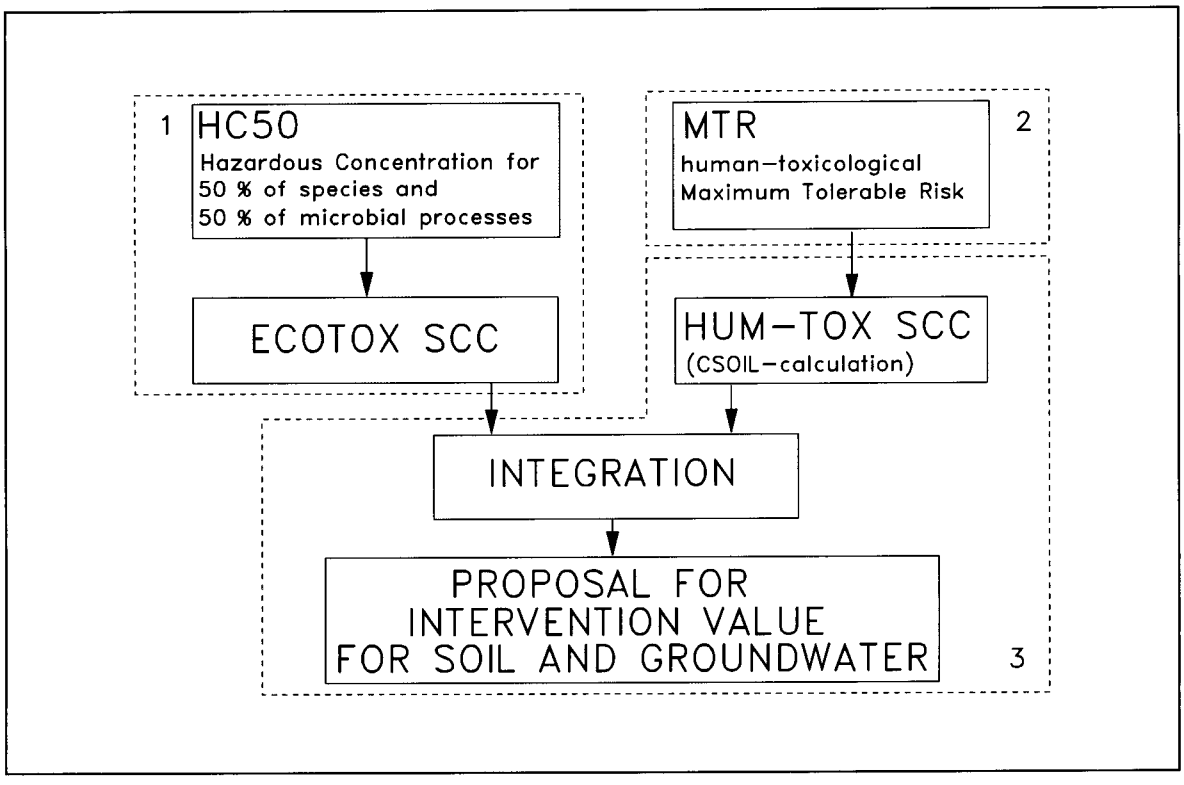

figure 1.1. Outline of the Intervention value for soil clean-up.

table 1.1. Substances evaluated in 1993 and 1994 or second and third series of substances

Second series of substances
I Metals and trace elements
antimony
beryllium
boron
V Chlorinated hydrocarbons
dioxine (2,3,7,8-TCDD)
VI Pesticides
chlordane
heptachlor
endosulfan
tributyltin oxide
fentinacetate
azinphos methyl
VII Other pollutants
methylethylketon
Third series of substances
I Metals and trace elements
silver
III Aromatic compounds
dodecylbenzene
1,2,3-trimethylbenzene
1,2,4-trimethylbenzene
1,3,5-trimethylbenzene
1,2,3,4-tetramethylbenzene
1,2,3,5-tetramethylbenzene
V Chlorinated hydrocarbons
1,1-dichloroethane
1,1,1-trichloroethane
1,2-dichloroethene (*cis en trans*)
VII Other pollutants
ethylene glycol
diethylene glycol
acrylonitrile
formaldehyde
methanol
butanol
butylacetate
methyl *tert*-butyl ether

2. METHODOLOGY

The criterium for the ecotoxicological serious soil contamination concentration is that there is a serious danger for a soil ecosystem when 50% of the species and 50% of the microbial processes are threatened. This will be the case when the NOEC (No-Observed-Effect-Concentration) for effects on vital life-functions of species (like survival, growth and reproduction) and microbial- and enzymatic processes are exceeded. If a substance has a potential for secondary poisoning, the possible adverse effects due to secondary poisoning are incorporated in the criterium.

The methodology used to derive ecotoxicological serious soil contamination concentration or ECOTOX SCC is described in a stepwise protocol (Fig. 2.1). The procedure to derive the ECOTOX SCC is described in Crommentuijn et al. (1995). The first step of the protocol describes which data are needed. Data on the toxicity of the substance for different species have to be collected from the literature. The second step gives the formulas for normalisation and standardisation of the data on terrestrial species and microbial processes. After normalisation and standardisation of these data in step 3 a selection of the data is made. Step 4 describes the method used to calculate an HC50(terrestrial species) and HC50(microbial processes). The method used to derive the HC50(birds) and HC50(mammals) to check if there is a risk for secondary poisoning is described in step 5.

If not enough data on terrestrial species and microbial processes are available to derive a reliable criterium for serious soil contamination, the HC50(terrestrial species) and HC50(microbial processes) are compared with a partition-HC50 using data on the toxicity of aquatic species. If no data on terrestrial species and microbial processes are available only a partition-HC50 can be derived. The methods used to derive partition-HC50s are described in step 6, 7, 8 and 9. In step 10 the derivation of the ecotoxicological criterium for serious soil contamination from the HC50-values is described.

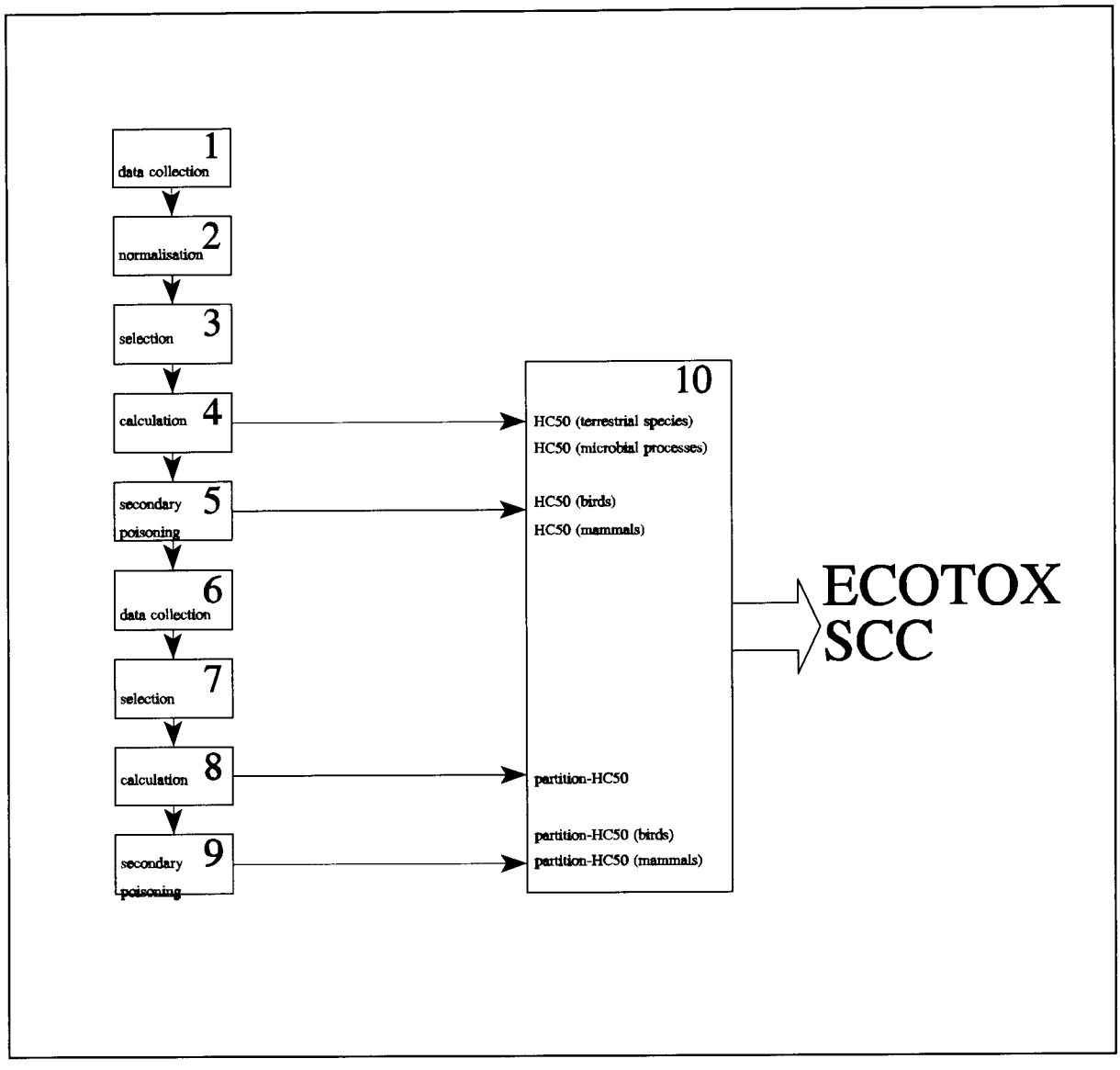

figure 2.1. Outline of the ecotoxicological serious soil contamination concentration or ECOTOX SCC.

3. ECOTOXICOLOGICAL SERIOUS SOIL CONTAMINATION CONCENTRATIONS OR ECOTOX SCCs

3.1. Second series of substances, group I, metals and trace elements

- **SUBSTANCE: Antimony**

Selected data freshwater species:

species	parameter	value (mg/l)
M. aeruginosa	NOEC	23.2
E. sulcatum s.	NOEC	121
D. magna	EC50	420
T. tubifex	EC50	680
L. idus melanotus	LC50	1100

Selected data marine species:

species	parameter	value (mg/l)
C. variegatus	LC50	7.25

HC50(terrestrial species): not possible to calculate
HC50(processes): not possible to calculate
HC50(aquatic species): 34 mg/l, log Kp=1.93 l/kg (Van Den Berg et al., 1994)
partition-HC50: 2894 mg/kg
PROPOSED ECOTOX SCC: 2890 mg/kg.

- **SUBSTANCE: Beryllium**

Selected data terrestrial species:

species	parameter	value in standard soil (mg/kg)
B. oleracea	NOEC	113

Selected data microbial and enzymatic processes:

process	parameter	value in standard soil (mg/kg)
respiration	NOEC	0.66
nitrification	NOEC	56.3
N-mineralisation	EC50	92

Selected data freshwater species:

species	parameter	value (µg/l)
P. putida	NOEC	1.36
M. aeruginosa	NOEC	30
S. qaudricauda	NOEC	2.0
C. paramecium	NOEC	510
E. sulcatum	NOEC	4
U. parduczi	NOEC	17
C. carpio	NOEC	80
D. magna	EC50	1830
T. tubifex	EC50	10000
I. punctatus	LC50	6100
L. reticulatus	LC50	3890
L. idus melanotus	LC50	1920
A. opacum	LC50	10100
A. maculatum	LC50	11500

HC50(terrestrial species): 113 mg/kg
HC50(processes): 7.49 mg/kg
HC50(aquatic species): 89.7 µg/l, log Kp=1.58 l/kg (Van Den Berg et al., 1994)
partition-HC50: 3.41 mg/kg
PROPOSED ECOTOX SCC: 29.1 mg/kg.
partition-HC50 NOT TAKEN INTO ACCOUNT BECAUSE RELIABILITY OF PARTITION COEFFICIENT FOR METALS IS LOW

- **SUBSTANCE: Boron**

Selected data terrestrial species:

species	parameter	value (mg/kg)
H. vulgare	NOEC	1.0
S. vulgare s.	NOEC	5.04
M. sativa	EC50	21

Selected data microbial and enzymatic processes:

process	parameter	value (mg/kg)
nitrification	NOEC	38
urease	NOEC	11.7
dehydrogenase	EC50	253

Selected data freshwater species:

species	parameter	value (µg/l)
P. putida	NOEC	289700
C. Paramecium	NOEC	10586
E. sulcatum	NOEC	270
U. parduczi	NOEC	30360
M. aeruginosa	NOEC	20334
S. quadricauda	NOEC	160
D. magna	NOEC	6197
C. decorus	NOEC	10000

HC50(terrestrial species): 2.17 mg/kg
HC50(processes): 23 mg/kg
HC50(aquatic species): 6890 µg/l, log Kp=1.00 l/kg (Van Den Berg et al., 1994)
partition-HC50: 68.9 mg/kg
PROPOSED ECOTOX SCC: 7.0 mg/kg.
THIS VALUE IS BASED ON TOXICITY DATA WITHOUT A SOIL TYPE CORRECTION!! partition-HC50 NOT TAKEN INTO ACCOUNT BECAUSE RELIABILITY OF PARTITION COEFFICIENT FOR METALS IS LOW

3.2. Second series of substances, group V, chlorinated hydrocarbons

- SUBSTANCE: Dioxine (2,3,7,8-TCDD)

Selected data terrestrial species:

species	parameter	value in standard soil (mg/kg)
A. caliginosa	NOLC	9.6
fauna, general	NOEC	0.0075

Selected data freshwater species:

species	parameter	value (ng/l)
Paranais spec.	NOEC	200
Physia spec.	NOEC	200
O. mykiss	NOEC	0.038
O. latipes	NOEC	5.9
E. lucius	NOEC	0.05
J. floridae	NOEC	0.38
O. kisutch	NOEC	0.028
O. mykiss	NOEC	0.86
P. promelas	NOEC	0.7

Selected data mammals:

species	parameter	value (ng/kg food)
*R. norvegicus**	NO(A)EL	20

Selected data BCFs and calculated NOECs for predatory organisms:

species	parameter	value	
freshwater fish	BCF	40000	
worm	BCF	0.7	
predatory org.$_{soil}$*	NOEC	29	ng/kg
predatory org.$_{aqua}$*	NOEC	0.0005	ng/l

SUBSTANCE: Dioxine (2,3,7,8-TCDD)

HC50(terrestrial species): 0.27 mg/kg
HC50(soil + predatory org.$_{soil}$): 0.013 mg/kg*
HC50(predatory org.$_{soil}$): 2.9 E-5 mg/kg*
HC50(processes): not possible to calculate
HC50(aquatic species): 1.12 ng/l, log Kp=5.50 l/kg (Liem et al., 1993)
HC50(partition, aquatic species): 0.35 mg/kg
HC50(aquatic + predatory org.$_{aquatic}$): 0.52 ng/l*
HC50(partition, aquatic + predatory org.$_{aquatic}$):0.16 mg/kg*
HC50(predatory org.$_{aquatic}$): 0.0005 ng/l*
HC50(partition, predatory org.$_{aquatic}$): 1.58 E-4 mg/kg*
PROPOSED ECO SCC: <u>0.046 mg/kg</u> **

---

* Data for predatory organisms based on only one NO(A)EL for mammals, no data for other mammals and birds available.

** proposed ecotoxicological intervention value is based on HC50(soil + predatory org.$_{soil}$) and HC50(partition, aquatic + predatory org.$_{aquatic}$). Reliability is very low because only few BCF data are available. From these few data a risk for secondary poisoning seems to be expected.

NOTE: Evaluation of dioxine took place in 1993. Because new data have become available the ECOTOX SCC for dioxine will be re-evaluated.

3.3. Second series of substances, group VI, pesticides

- SUBSTANCE: Chlordane

Selected data terrestrial species:

species	parameter	value in standard soil (mg/kg)
F. candida	NOEC	5.00
E. andrei	LC50	42
G. pennsylvanicus	LC50	4.25

Selected data microbial and enzymatic processes:

process	parameter	value in standard soil (mg/kg)
respiration	NOEC	34.5
invertase-activity	NOEC	34.5
amylase-activity	NOEC	34.5

Selected data freshwater species:

species	parameter	value (µg/l)
D. magna	NOEC	12.1
H. azteca	NOEC	5.3
Chironumus spec.	NOEC	0.7
L. macrochirus	NOEC	0.54
P. promelas	NOEC	0.75
S. fontinalis	NOEC	0.11
P. californica	LC50	15
D. magna	EC50	28.4
D. pulex	EC50	29
G. lacustris	LC50	26
G. fasciatus	LC50	40
S. serrulatus	EC50	20
C. commersoni	LC50	17
I. punctatus	LC50	2.32
M. salmoides	LC50	3
O. clarki	LC50	23
O. kisutch	LC50	15
O. mykiss	LC50	34.7
P. flavescens	LC50	9.6
S. trutta	LC50	11.1
S. fontinalis	LC50	47

SUBSTANCE: Chlordane

HC50(terrestrial species): 2.58 mg/kg
HC50(processes): 34.5 mg/kg
HC50(aquatic species): 1.36 µg/l, log Kp=3.36 l/kg (log Koc=4.60 l/kg, Van Den Berg et al., 1994)
partition-HC50: 3.14 mg/kg
PROPOSED ECOTOX SCC: 5.44 mg/kg.
NO RISK FOR SECONDARY POISONING IS EXPECTED (Van De Plassche et al., 1994)

- **SUBSTANCE: Heptachlor**

Selected data terrestrial species:

species	parameter	value in standard soil (mg/kg)
F. candida	NOEC	0.5
H. armata	NOEC	5.0
O. justi porteri	NOEC	5.0
P. melanarius	NOEC	0.05
G. pennsylvanicus	LC50	0.57

Selected data freshwater species:

species	parameter	value (µg/l)
D. magna	NOEC	12.5
P. promelas	NOEC	0.86
D. pulex	EC50	42
G. fasciatus	LC50	47.3
G. lacustris	LC50	29
O. nais	LC50	7.8
S. serrulatus	EC50	61.3
C. sabulosa	LC50	2.8
P. badia	LC50	0.9
P. californica	LC50	1.1
B. rero	LC50	170
E. lucius	LC50	6.2
I. melas	LC50	63
I. punctatus	LC50	25
L. reticulatus	LC50	85
L. macrochirus	LC50	29.9
L. microlophus	LC50	17
M. salmoides	LC50	10
O. mykiss	LC50	24.1
P. promelas	LC50	42.4
S. kisutch	LC50	59
S. tshawytscha	LC50	17
B. woodhousii f.	LC50	440

SUBSTANCE: Heptachlor

HC50(terrestrial species): 0.23 mg/kg
HC50(processes): not possible to calculate
HC50(aquatic species): 2.72 µg/l, log Kp=3.15 l/kg (log Koc=3.21 l/kg, Van Den Berg et al., 1994)
partition-HC50: 4.45 mg/kg
PROPOSED ECOTOX SCC: 1.01 mg/kg.
NO RISK FOR SECONDARY POISONING IS EXPECTED (Van De Plassche et al., 1994)

- **SUBSTANCE: Endosulfan**

Selected data terrestrial species:

species	parameter	value in standard soil (mg/kg)
L. sativa	NOEC	1600
Chlorella, Scenedesmus, Oscillatoria	NOEC	125
E. andrei	LC50	6.70
L. terrestris	LC50	7.80
P. posthuma	LC50	5.01

Selected data microbial and enzymatic processes:

process	parameter	value in standard soil (mg/kg)
nitrification	EC50	1423

Selected data freshwater species:

species	parameter	value (µg/l)
C. vulgaris	NOEC	700
P. aurelia	NOEC	100
D. magna	NOEC	2.7
S. mossambicus	NOEC	0.2

HC50(terrestrial species): 16.9 mg/kg
HC50(processes): 142.3 mg/kg
HC50(aquatic species): 13.9 µg/l, log Kp=1.87 l/kg (log Koc=3.11 l/kg, Van Den Berg et al., 1994)
partition-HC50: 1.04 mg/kg
PROPOSED ECOTOX SCC: 7.14 mg/kg.
NO RISK FOR SECONDARY POISONING IS EXPECTED (Van De Plassche et al., 1994)

- **SUBSTANCE: Tributyltin oxide**

Selected data freshwater species:

species	parameter	value (µg/l)
C. pyrenoidosa	NOEC	18
S. pannonicus	NOEC	32
L. stagnalis	NOEC	0.32
D. magna	NOEC	0.30
P. reticulata	NOEC	0.32

Selected data freshwater species:

species	parameter	value (µg/l)
M. edulis	NOEC	0.1
G. aculeatus	NOEC	0.1

HC50(terrestrial species): not possible to calculate
HC50(processes): not possible to calculate
HC50(aquatic species): 0.66 µg/l, log Kp=2.86 l/kg (log Koc=4.10 l/kg, Van Den Berg et al., 1994)
partition-HC50: 0.48 mg/kg
PROPOSED ECOTOX SCC: 0.48 mg/kg

- **SUBSTANCE: Fentinacetate**

Selected data terrestrial species:

species	parameter	value in standard soil (mg/kg)
E. andrei	LC50	27
L. terrestris	LC50	38.3

Selected data freshwater species:

species	parameter	value (µg/l)
S. subspicatus	NOEC	10
A. glabratus	LC50	22
B. glabrata	LC50	50
B. sudanica	LC50	25.4
B. nasustus	LC50	20.5
R. heteromorpha	LC50	220

HC50(terrestrial species): 3.22 mg/kg
HC50(processes): not possible to calculate
HC50(aquatic species): 6.46 µg/l, log Kp=3.10 l/kg (log Koc=4.34 l/kg, Van Den Berg et al., 1994)
partition-HC50: 8.20 mg/kg
PROPOSED ECOTOX SCC: 5.14 mg/kg

- **SUBSTANCE: Azinphos methyl**

Selected data terrestrial species:

species	parameter	value in standard soil (mg/kg)
L. sativa	NOEC	500
F. candida	NOEC	2.5
N. brevicollis	LC50	367
T. quadistria	LC50	300
F. melonaria	LC50	400

Selected data freshwater species:

species	parameter	value (µg/l)
A. aquaticus	NOEC	0.25
G. pseudolimnaeus	NOEC	0.1
D. magna	NOEC	0.1
A. lycorias	NOEC	1.36
C. crystallinus	NOEC	2.0
C. dipterium	NOEC	2.0
E. subvaria	NOEC	2.5
H. bettoni	NOEC	2.94
O. rupinsulensis	NOEC	1.73
P. promelas	NOEC	0.33

HC50(terrestrial species): 35.3 mg/kg
HC50(processes): not possible to calculate
HC50(aquatic species): 0.75 µg/l, log Kp=1.94 l/kg (log Koc=3.18 l/kg, Van Den Berg et al., 1994)
partition-HC50: 0.066 mg/kg
PROPOSED ECOTOX SCC: 1.53 mg/kg

3.4. Second series of substances, group VII, other pollutants

- **SUBSTANCE: Methylethylketone**

Selected data freshwater species:

species	parameter	value (mg/l)
E. sulcatum	NOEC	170
C. paramecium	NOEC	3000
U. parduczi	NOEC	2800
P. putida	NOEC	1150
M. aeruginosa	NOEC	120
S. quadricauda	NOEC	4300

HC50(terrestrial species): not possible to calculate
HC50(processes): not possible to calculate
HC50(aquatic species): 973 mg/l, log Kp=-1.33 (l/kg) (log Koc=-0.10 l/kg, Van Den Berg et al., 1994)
partition-HC50: 175 mg/kg*
PROPOSED ECOTOX SCC: 175 mg/kg

---

*partition-HC50 calculated as follows (Kreule et al., 1995):

partition-HC50= (((r*Kp)+o)/r)*HC50(aquatic species)

in which:
r=density soil=1.5 kg/dm^3
o=humidity soil=0.2
Kp=partition coefficient for standard soil

3.5. Third series of substances, group I, metals and trace elements

- **SUBSTANCE: Silver**

Selected data microbial and enzymatic processes:

process	parameter	value (mg/kg)
catalase	NOEC	25
dehydrogenase	NOEC	5
nitrification	NOEC	54
arylsulfatase	EC50	157
urease	EC50	85

Selected data freshwater species:

species	parameter	value (µg/l)
P. putida	NOEC	6
M. aeruginosa	NOEC	0.7
S. quadricauda	NOEC	9.5
C. paramecium	NOEC	2.6
E. sulcatum	NOEC	580
U. parduczi	NOEC	100
D. magna	NOEC	3.6
O. mykiss	NOEC	0.15
P. promelas	NOEC	0.64
P. acuticornis	EC50	5300
C. elegans	LC50	100
T. tubifex	EC50	31
C. pseudogracilis	LC50	5
I. punctatus	LC50	17.3
L. macrochirus	LC50	13
L. idus melanotus	LC50	400
O. kisutch	LC50	7.5
O. mykiss	LC50	10
O. latipes	LC50	300
P. promelas	LC50	8.8
T. articus	LC50	5.5
A. hypnorum	LC50	241
D. polymorpha	LC50	400
C. tentans	EC50	10

SUBSTANCE: Silver

Selected data marine species

species	parameter	value (µg/l)
C. varia	NOEC	10
C. gigas	NOEC	20
M. galloprovinciales	NOEC	20
M. edulis	NOEC	25
S. plana	LC50	271
C. variegatus	LC50	58000

HC50(terrestrial species): not possible to calculate
HC50(processes): 15 (mg/kg)*
HC50(aquatic species): 7.6 (ug/l)
Kd: 128 (Kreule et al., 1995)
partition-HC50: 0.97 mg/kg
PROPOSED ECOTOX SCC: 15 mg/kg

---

*calculations based on data without a soil type correction.
HC50 based on tests with different soil types.

3.6. Third series of substances, group III, Aromatic compounds

- **SUBSTANCE: Dodecylbenzene**

Selected data freshwater species:

species	parameter	value (µg/l)
D. magna	NOEC	14
L. idus melanotus	LC50	796000

HC50(terrestrial species): not possible to calculate
HC50(processes): not possible to calculate
HC50(aquatic species): not possible to calculate
partition-HC50: not possible to calculate
NO PROPOSAL FOR ECOTOX SCC

- **SUBSTANCE: 1,2,3-trimethylbenzene**

Selected data freshwater species:

species	parameter	value (mg/l)
C. botulinum	QSAR	45
B. subtilus	QSAR	4.0
P. putida	QSAR	11
S. cerevisiae	QSAR	56
S. costacum	QSAR	8.1
S. subspicatus	QSAR	2.4
S. capricornutum	QSAR	0.35
T. pyriformis	QSAR	5.6
H. oligactus	QSAR	0.56
L. stagnalis	QSAR	0.52
N. spinipes	QSAR	0.91
D. magna	QSAR	0.26
A. aegypti	QSAR	0.36
C. pipiens	QSAR	0.65
P. promelas	QSAR	0.25
B. rerio	QSAR	0.25
A. mexicanum	QSAR	0.67
R. temporaria	QSAR	0.28
X. laevis	QSAR	0.71

Selected data marine species

species	parameter	value (ug/l)
P. phosphoreum	QSAR	9.2

HC50(terrestrial species): not possible to calculate
HC50(processes): not possible to calculate
HC50(aquatic species): 1.53 mg/l, Kp=157 l/kg (log Koc=3.43, derived from log Koc=0.989(logKow)-0.346 (Karickhoff, 1981), log Kow=3.82 (Kreule et al., 1995))
partition-HC50: 240 mg/kg
PROPOSED ECOTOX SCC: 240 mg/kg

- **SUBSTANCE: 1,2,4-trimethylbenzene**

Selected data freshwater species:

species	parameter	value (mg/l)
C. colpoda	NOEC	1.4
T. elliotti	NOEC	12
C. botulinum	QSAR	43
B. subtilus	QSAR	3.9
P. putida	QSAR	10
S. cerevisiae	QSAR	53
S. costacum	QSAR	7.7
S. subspicatus	QSAR	2.3
S. capricornutum	QSAR	0.33
T. pyriformis	QSAR	5.3
H. oligactus	QSAR	0.52
L. stagnalis	QSAR	0.49
N. spinipes	QSAR	0.86
A. aegypti	QSAR	0.33
C. pipiens	QSAR	0.62
B. rerio	QSAR	0.24
A. mexicanum	QSAR	0.63
R. temporaria	QSAR	0.26
X. laevis	QSAR	0.67
D. magna	EC50	3.6
P. promelas	LC50	7.7

Selected data marine species

species	parameter	value (mg/l)
P. phosphoreum	QSAR	8.8
Artemia spec.	LC50	12

SUBSTANCE: 1,2,4-trimethylbenzene

HC50(terrestrial species): not possible to calculate
HC50(processes): not possible to calculate
HC50(aquatic species): 1.15 mg/l, Kp=167 l/kg (log Koc=3.46, derived from log Koc=0.989(logKow)-0.346 (Karickhoff, 1981), log Kow=3.85 (Kreule et al., 1995))
partition-HC50: 192 mg/kg
PROPOSED ECOTOX SCC: 192 mg/kg

- **SUBSTANCE: 1,3,5-trimethylbenzene**

Selected data freshwater species:

species	parameter	value (mg/l)
S. subspicatus	NOEC	8.1
D. magna	NOEC	0.89
C. botulinum	QSAR	44
B. subtilus	QSAR	3.9
P. putida	QSAR	11
S. cerevisiae	QSAR	54
S. costacum	QSAR	7.9
S. capricornutum	QSAR	0.34
T. pyriformis	QSAR	5.3
H. oligactus	QSAR	0.53
L. stagnalis	QSAR	0.50
N. spinipes	QSAR	0.88
A. aegypti	QSAR	0.34
C. pipiens	QSAR	0.63
P. promelas	QSAR	0.24
B. rerio	QSAR	0.24
A. mexicanum	QSAR	0.65
R. temporaria	QSAR	0.27
X. laevis	QSAR	0.68
C. auratus	LC50	13

Selected data marine species

species	parameter	value (mg/l)
P. phosphoreum	QSAR	8.9
Artemia spec.	LC50	14
C. magister	LC50	4.3

HC50(terrestrial species): not possible to calculate
HC50(processes): not possible to calculate
HC50(aquatic species): 1.24 mg/l, Kp=163 l/kg (log Koc=3.45, derived from log Koc=0.989(logKow)-0.346 (Karickhoff, 1981), log Kow=3.84 (Kreule et al., 1995))
partition-HC50: 202 mg/kg
PROPOSED ECOTOX SCC: 202 mg/kg

- **SUBSTANCE: 1,2,3,4-tetramethylbenzene**

Selected data freshwater species:

species	parameter	value (mg/l)
C. botulinum	QSAR	20
B. subtilus	QSAR	2.2
P. putida	QSAR	5.8
S. cerevisiae	QSAR	26
S. costacum	QSAR	4.0
S. subspicatus	QSAR	1.0
S. capricornutum	QSAR	0.13
T. pyriformis	QSAR	2.5
H. oligactus	QSAR	0.23
L. stagnalis	QSAR	0.22
N. spinipes	QSAR	0.42
D. magna	QSAR	0.09
A. aegypti	QSAR	0.11
C. pipiens	QSAR	0.27
P. promelas	QSAR	0.10
B. rerio	QSAR	0.10
A. mexicanum	QSAR	0.27
R. temporaria	QSAR	0.09
X. laevis	QSAR	0.28

Selected data marine species

species	parameter	value (mg/l)
P. phosphoreum	QSAR	4.7

HC50(terrestrial species): not possible to calculate
HC50(processes): not possible to calculate
HC50(aquatic species): 0.65 mg/l, Kp=494 l/kg (log Koc=3.93, derived from log Koc=0.989(logKow)-0.346 (Karickhoff, 1981), log Kow=4.32 (Kreule et al., 1995))
partition-HC50: 321 mg/kg
PROPOSED ECOTOX SCC: 321 mg/kg

- **SUBSTANCE: 1,2,3,5-tetramethylbenzene**

Selected data freshwater species:

species	parameter	value (mg/l)
C. botulinum	QSAR	17
B. subtilus	QSAR	1.9
P. putida	QSAR	5.2
S. cerevisiae	QSAR	23
S. costacum	QSAR	3.5
S. subspicatus	QSAR	0.88
S. capricornutum	QSAR	0.11
T. pyriformis	QSAR	2.2
H. oligactus	QSAR	0.20
L. stagnalis	QSAR	0.19
N. spinipes	QSAR	0.37
D. magna	QSAR	0.07
A. aegypti	QSAR	0.10
C. pipiens	QSAR	0.24
P. promelas	QSAR	0.09
B. rerio	QSAR	0.09
A. mexicanum	QSAR	0.24
R. temporaria	QSAR	0.07
X. laevis	QSAR	0.24

Selected data marine species

species	parameter	value (mg/l)
P. phosphoreum	QSAR	4.2

HC50(terrestrial species): not possible to calculate
HC50(processes): not possible to calculate
HC50(aquatic species): 0.56 mg/l, Kp=580 l/kg (log Koc=4.00, derived from log Koc=0.989(logKow)-0.346 (Karickhoff, 1981), log Kow=4.39 (Kreule et al., 1995))
partition-HC50: 325 mg/kg
PROPOSED ECOTOX SCC: 325 mg/kg

- **SUBSTANCE: 1,2,4,5-tetramethylbenzene**

Selected data freshwater species:

species	parameter	value (mg/l)
M. aeruginosa	NOEC	3.4
C. botulinum	QSAR	30
B. subtilus	QSAR	3.0
P. putida	QSAR	8.0
S. cerevisiae	QSAR	38
S. costacum	QSAR	5.7
S. subspicatus	QSAR	1.6
S. capricornutum	QSAR	0.21
T. pyriformis	QSAR	3.7
H. oligactus	QSAR	0.36
L. stagnalis	QSAR	0.33
N. spinipes	QSAR	0.62
A. aegypti	QSAR	0.20
C. pipiens	QSAR	0.42
P. promelas	QSAR	0.16
B. rerio	QSAR	0.16
A. mexicanum	QSAR	0.43
R. temporaria	QSAR	0.15
X. laevis	QSAR	0.44
C. angulosa	EC50	9.7
C. vulgaris	EC50	9.9
D. magna	LC50	0.47

Selected data marine species

species	parameter	value (mg/l)
P. phosphoreum	QSAR	6.6

HC50(terrestrial species): not possible to calculate
HC50(processes): not possible to calculate
HC50(aquatic species): 0.64 mg/l, Kp=621 l/kg (log Koc=4.03, derived from log Koc=0.989(logKow)-0.346 (Karickhoff, 1981), log Kow=4.42 (Kreule et al., 1995))
partition-HC50: 397 mg/kg
PROPOSED ECOTOX SCC: 397 mg/kg

3.7. Third series of substances, group IV, Chlorinated hydrocarbons

- **SUBSTANCE: 1,1-dichloroethane**

Selected data freshwater species:

species	parameter	value (mg/l)
C. botulinum	QSAR	1729
B. subtilus	QSAR	66
P. putida	QSAR	178
S. cerevisiae	QSAR	1775
S. costacum	QSAR	193
S. subspicatus	QSAR	111
S. capricornutum	QSAR	31
T. pyriformis	QSAR	192
H. oligactus	QSAR	25
L. stagnalis	QSAR	24
N. spinipes	QSAR	29
A. aegypti	QSAR	48
C. pipiens	QSAR	30
P. promelas	QSAR	12
B. rerio	QSAR	12
A. mexicanum	QSAR	34
R. temporaria	QSAR	38
X. laevis	QSAR	39
D. magna	EC50	92

Selected data marine species:

species	parameter	value (mg/l)
P. phosphoreum	QSAR	181

HC50(terrestrial species): not possible to calculate
HC50(processes): not possible to calculate
HC50(aquatic species): 26 mg/l
Kp: 1.60 l/kg (Koc=27.5 l/kg , Kreule et al., 1995)
partition-HC50: 41.6 mg/kg
PROPOSED ECOTOX SCC: 42 mg/kg

- **SUBSTANCE: 1,1,1-trichloroethane**

Selected data freshwater species:

species	parameter	value (mg/l)
P. putida	NOEC	47
M. aeruginosa	NOEC	180
S. quadricauda	NOEC	220
D. magna	NOEC	1.3
C. carpio	NOEC	7.7
C. angulosa	EC50	280
C. vulgaris	EC50	150
S. aurantia	EC50	410
L. macrochirus	LC50	72
P. promelas	LC50	49

Selected data marine species:

species	parameter	value (mg/l)
P. phosphoreum	EC50	8.0
C. variegatus	LC50	71

HC50(terrestrial species): not possible to calculate
HC50(processes): not possible to calculate
HC50(aquatic species): 16 mg/l
Kp: 5.41 (log Koc=1.97 l/kg, Kreule et al., 1995)
partition-HC50: 88 mg/kg
PROPOSED ECOTOX SCC: 88 mg/kg

- **SUBSTANCE: 1,2-dichloroethene**

Selected data freshwater species:

species	parameter	value (mg/l)
C. botulinum	QSAR	5357
B. subtilus	QSAR	159
P. putida	QSAR	428
S. cerevisiae	QSAR	5201
S. costacum	QSAR	521
S. subspicatus	QSAR	365
S. capricornutum	QSAR	125
T. pyriformis	QSAR	579
H. oligactus	QSAR	84
L. stagnalis	QSAR	78
N. spinipes	QSAR	84
A. aegypti	QSAR	219
C. pipiens	QSAR	98
P. promelas	QSAR	41
B. rerio	QSAR	41
A. mexicanum	QSAR	114
R. temporaria	QSAR	170
X. laevis	QSAR	136
D. magna	LC50	220
L. macrochirus	LC50	140

Selected data marine species:

species	parameter	value (mg/l)
P. phosphoreum	QSAR	461

HC50(terrestrial species): not possible to calculate
HC50(processes): not possible to calculate
HC50(aquatic species): 63 mg/l
Kp: 3.78 l/kg (Koc=65.1, Kreule et al., 1995)
partition-HC50: 238 mg/kg
PROPOSED ECOTOX SCC: 238 mg/kg

3.8. Third series of substances, group VII, Other pollutants

- **SUBSTANCE: Ethyleneglycol**

Selected data freshwater species:

species	parameter	value (mg/l)
M. aeruginosa	NOEC	2000
C. paramaecium	NOEC	112
D. magna	LC50	46300
O. mykiss	LC50	28664
P. promelas	LC50	52899

Selected data marine species:

S. ocellatus	EC50	124

SUBSTANCE: Ethyleneglycol

HC50(soil organisms): not possible to calculate
HC50(processes): not possible to calculate
HC50(aquatic species): 676 mg/l, Kp=0 (Kreule et al., 1995)
partition-HC50: 90 mg/kg*
PROPOSED ECOTOX SCC: 90 mg/kg

---

*partition-HC50 calculated as follows (Kreule et al., 1995):

partition-HC50= (((r*Kp)+o)/r)*HC50(aquatic species)

in which:

r=density soil=1.5 kg/dm^3
o=humidity soil=0.2
Kp=partition coefficient for standard soil

- **SUBSTANCE: Diethylene glycol**

Selected data freshwater species:

species	parameter	value (mg/l)
P. putida	NOEC	8000
M. aeruginosa	NOEC	1700
S. quadricauda	NOEC	2700
E. sulcatum	NOEC	10800

Selected data marine species:

P. phosphoreum	EC50	29000

HC50(terrestrial species): not possible to calculate
HC50(processes): not possible to calculate
HC50(aquatic species): 3598 mg/l
Kp: 125 (Koc=2149, Kreule et al., 1994)
partition-HC50: 448462 mg/kg
PROPOSED ECOTOX SCC: 450000 mg/kg

- **SUBSTANCE: Acrylonitril**

Selected data freshwater species:

species	parameter	value (mg/l)
D. magna	EC50	9.1
B. rerio	LC50	25
L. macrochirus	LC50	13
P. promelas	LC50	14
P. reticulata	LC50	34

Selected data marine species:

species	parameter	value (mg/l)
O. diadema	LC50	68
L. rhomboides	LC50	25

HC50(terrestrial species): not possible to calculate
HC50(processes): not possible to calculate
HC50(aquatic species): 2.2 mg/l
Kp: 0.60 (log Koc=1.02, geometric mean of values in Appendix V)
partition-HC50: 1.3 mg/kg
PROPOSED ECOTOX SCC: 1.3 mg/kg

- **SUBSTANCE: Formaldehyde**

Selected data freshwater species:

species	parameter	value (mg/l)
P. putida	NOEC	5
M. aeruginosa	NOEC	0.14
S. quadricauda	NOEC	0.88
C. paramaecium	NOEC	1.6
E. sulcatum	NOEC	7.7
U. parduczi	NOEC	2.3
Cypridopsis spec.	EC50	9.2
D. magna	EC50	15
P. kadiakensis	EC50	186
Corbicula spec.	EC50	5
Helisoma spec.	EC50	37
Notonecta spec.	EC50	330
P. phosphoreum	EC50	3
I. melas	EC50	25
I. punctatus	LC50	20
L. cyanellus	LC50	69
L. macrochirus	LC50	40
L. idus melanotus	LC50	15
M. dolomieui	LC50	54
M. salmoides	LC50	57
O. mykiss	LC50	43
O. salar	LC50	69
S. namaycush	LC50	39
P. reticulata	LC50	27

Selected data marine species:

species	parameter	value (mg/l)
C. chanos	LC50	232
M. saxatilis	LC50	5.7

SUBSTANCE: Formaldehyde

HC50(terrestrial species):not possible to calculate
HC50(processes):not possible to calculate
HC50(aquatic species): 2.3 mg/l, Kp=0 (Kreule et al., 1995)
HC50(partition): 0.30 mg/kg*
PROPOSED ECOTOX SCC :0.30 mg/kg

---

*partition-HC50 calculated as follows (Kreule et al., 1995):

partition-HC50= (((r*Kp)+o)/r)*HC50(aquatic species)

in which:
r=density soil=1.5 kg/dm^3
o=humidity soil=0.2
Kp=partition coefficient for standard soil

- **SUBSTANCE: Methanol**

Selected data freshwater species:

species	parameter	value (mg/l)
P. putida	NOEC	6600
M. aeruginosa	NOEC	530
S. qaudricauda	NOEC	8000
C. paramaecium	NOEC	441
C. pyredoinosa	EC50	29
A. cylindrica	EC50	20
A. inaequalis	EC50	21
A. variabilis	EC50	25
P. caudatum	LC50	7700
D. magna	EC50	13200
L. macrochirus	LC50	19100
O. mykiss	LC50	618
P. promelas	LC50	29000

Selected data marine species

species	parameter	value (mg/l)
P. phosphoreum	EC50	72457
E. modestus	EC50	0.77
N. spinipes	LC50	12000
A. alburnus	LC50	28000
S. ocellatus	EC50	120

HC50(terrestrial species):not possible to calculate
HC50(processes): not possible to calculate
HC50(aquatic species): 250 mg/l, Kp=0 (Kreule et al., 1995)
partition-HC50= 33*
PROPOSED ECOTOX SCC: 33 mg/kg

---

*partition-HC50 calculated as follows (Kreule et al., 1995):
partition-HC50= (((r*Kp)+o)/r)*HC50(aquatic species)

in which:
r=density soil=1.5 kg/dm^3
o=humidity soil=0.2
Kp=partition coefficient for standard soil

- **SUBSTANCE: Butanol**

Selected data freshwater species:

species	parameter	value (mg/l)
P. putida	NOEC	650
M. aeruginosa	NOEC	100
S. quadricauda	NOEC	95
C. paramaecium	NOEC	28
E. sulcatum	NOEC	55
U. parduczi	NOEC	8
X. laevis	LC50	1200
D. magna	EC50	1880
C. auratus	LC50	1900
L. idus malnotus	LC50	1200
P. promelas	LC50	1730

Selected data marine species:

species	parameter	value (mg/l)
P. phosphoreum	EC50	3039
E. modestus	EC50	2.8
N. spinipes	LC50	2100
A. alburnus	LC50	2290

HC50(terrestrial species): not possible to calculate
HC50(processes): not possible to calculate
HC50(aquatic species): 76 mg/l
Kp: 0.34 (log Koc=0.76, Kreule et al., 1995)
partition-HC50: 26 mg/kg
PROPOSED ECOTOX SCC: 26 mg/kg

- **SUBSTANCE: Butylacetate**

Selected data freshwater species:

species	parameter	value (mg/l)
P. putida	NOEC	115
M. aeruginosa	NOEC	280
S. quadricauda	NOEC	21
C. paramaecium	NOEC	670
E. sulcatum	NOEC	321
U. parduczi	NOEC	574
D. magna	EC50	205
L. macrochirus	LC50	100
L. idus melanotus	LC50	71
P. promelas	LC50	18

Selected data marine species:

species	parameter	value (mg/l)
M. beryllina	LC50	185

HC50(terrestrial species): not possible to calculate
HC50(processes): not possible to calculate
HC50(aquatic species): 43 mg/l, Kp=2.2 (log Koc=1.58, Kreule et al., 1995)
partition-HC50: 95 mg/kg
PROPOSED ECOTOX SCC: 95 mg/kg

- **SUBSTANCE: Methyl-t-butylether**

Selected data freshwater species:

species	parameter	value (mg/l)
C. botulinum	QSAR	7633
B. subtilus	QSAR	206
P. putida	QSAR	554
S. costacum	QSAR	705
S. subspicatus	QSAR	533
S. capricornutum	QSAR	197
S. cerevisiae	QSAR	7278
T. pyriformis	QSAR	819
H. oligactus	QSAR	122
L. stagnalis	QSAR	114
N. spinipes	QSAR	118
D. magna	QSAR	185
A. aegypti	QSAR	364
C. pipiens	QSAR	143
B. rerio	QSAR	60
A. mexicanum	QSAR	169
R. temporaria	QSAR	282
X. laevis	QSAR	204
P. promelas	LC50	689

Selected data marine species

species	parameter	value (mg/l)
P. phosphoreum	QSAR	611

HC50(terrestrial species):not possible to calculate
HC50(processes):not possible to calculate
HC50(aquatic species): 162 mg/l
Kp: 0.77 (Koc=13.3, Kreule et al., 1995)
partition-HC50: 125 mg/kg
PROPOSED ECOTOX SCC: 125 mg/kg

---

4. REFERENCES

Crommentuijn, G.H., van de Plassche, E.J. and Canton, J.H. (1994) Guidance Document on the derivation of ecotoxicological criteria for serious soil contamination in view of the intervention value for soil clean-up. *RIVM-report nr.* 950011 003.

Denneman, C.A.J. & Gestel, C.A.M. van (1990) Bodemverontreiniging en bodemecosystemen: voorstel voor C-(toetsings)waarden op basis van ecotoxicologische risico's. [In Dutch] *RIVM-report nr.* 725201 001.

Denneman, C.A.J. & Gestel, C.A.M. van (1991) Afleiding van C-waarden voor bodemecosystemen op basis van aquatisch ecotoxicologische gegevens. [In Dutch] *RIVM-report nr.* 725201 008.

Janssen, P.J.C.M., Van Apeldoorn, M.E., Van Koten-Vermeulen, J.E.M. and Mennes, W.C. Human toxicological criteria for serious soil contamination: Compounds evaluated in 1993 and 1994. *RIVM-report nr.* 715810 009

Karickhoff, S.W. (1981) Semi-emperical estimation of sorption of hydrophobic pollutants on natural sediments and soils. *Chemosphere* 10(8): 833-846.

Kreule, P., Berg, R. van den, Waitz, M.F.W. & Swartjes, F.A. (1995) Calculation of human-toxicological Serious-Soil-Contamination-Concentrations and proposals for intervention values for clean-up of soil and groundwater: Third series of compounds. *RIVM-report nr.* 715810 010.

Van den Berg, R., Denneman, C.A.J. and Roels, J.M. (1993) Risk assessment of contaminated soil: Proposals for adjusted, toxicologically based Dutch soil clean-up criteria. In: Arendt, F., Annokkee, G.J., Bosman, R. and Van Den Brink, W.J. (eds.) *Contaminated Soil '93.*

Van den Berg, R., Bockting, G.J.M., Crommentuyn, G.H. & Janssen, P.J.C.M. (1994) Proposals for intervention values for soil clean-up: Second series of chemicals. *RIVM report nr.* 715810004.

APPENDIX I: RIVM-reports published in the Soil Intervention Project

Linders, J.B.H.J. (1990) Risicobeoordeling bij de mens bij blootstelling aan stoffen. Uitgangs-punten en veronderstellingen. [In Dutch] RIVM-report no. 725201003, dated August 1990.

Contains: description of calculation formulas to be used for estimation of human exposure via several routes in case of soil contamination; the formulas in this report were used in the compilation of the CSOIL-model as reported in the RIVM-report by van den Berg (1991/1994).

Denneman, C.A.J. & Gestel, C.A.M. van (1990) Bodemverontreiniging en bodemecosystemen: voorstel voor C-(toetsings)waarden op basis van ecotoxicologische risico's. [In Dutch] RIVM-report no. 725201001, dated April 1990.

Contains: ecotoxicolgical criteria for 1st series of chemicals; only data for soil organisms taken into consideration; the separate data for the individual compounds are presented in the appendix to this report.

Denneman, C.A.J. & Gestel, C.A.M. van (1991) Afleiding van C-waarden voor bodemecosystemen op basis van aquatisch ecotoxicologische gegevens. [In Dutch] RIVM-report no. 725201008, dated September 1991.

Contains: for the 1st series of chemicals aquatic ecotoxicological data and QSARs were now also taken into consideration for derivation of C-values for water; from the latter values soil C-values were calculated and compared to the soil C-values previously derived leading to changes for several chemicals.

Vermeire, T.G., Apeldoorn, M.E. van, Fouw, J.C. de & Janssen, P.J.C.M. (1991) Voorstel voor de humaantoxicologische onderbouwing van C-(toetsings)waarden. [In Dutch] RIVM-report no. 725201005, dated February 1991.

Contains: human-toxicological criteria (MPR-values) for 1st series of chemicals, this 1st series consists of 55 compounds or groups of compounds; includes description of the method used to derive the MPR-values.

Berg, R. van den (1991/1994) Blootstelling van de mens aan bodemverontreiniging. Een kwalitatieve en kwantitatieve analyse leidend tot voorstellen voor humaantoxicologische C-toetsingswaarden (beperkt herziene versie). [In Dutch] RIVM-report no. 725201006, dated April 1991/January 1994. Modified version of the original report from 1991.

Contains: description of the formulas that form the CSOIL model, the model used to estimate human exposure in case of soil pollution; based on the human-toxicological criteria (MPR-values) for the 1st series of chemicals, CSOIL is used to derive human-toxicological intervention values; appendix 1.11 to this report gives "new" modified human-toxicological intervention values.

Berg, R. van den & Roels, J.M. (1991) Beoordeling van risico's voor mens en milieu bij blootstelling aam bodemverontreiniging. Integratie van deelaspecten. [In Dutch] RIVM-report no. 725201007, dated February 1991.

Contains: for the 1st series of chemicals: integration of ecotoxicological criteria with the results of CSOIL calculations based on the human-toxicological criteria, yielding proposal for soil intervention values; note that several of the then proposed values have been modified at a later stage.

APPENDIX I (continued): RIVM-reports published in the soil Intervention project

Vermeire, T.G. (1993) Voorstel voor de humaantoxicologische onderbouwing van C-(toetsings)waarden. Betreft addendum op rapport 725201005. [In Dutch] RIVM-report no. 715801001, dated May 1993.

Contains: re-evaluation of 9 (groups of) compounds from the set dealt with in the Vermeire et al.-report from 1991.

Bockting, G.J.M., Swartjes, F.A., Koolenbrander, L.G.M. & Berg, R. van den (1994) Beoordelingssystematiek bodemkwaliteit ten behoeve van bouwvergunningsaanvragen. Deel I. Bodem-gebruiksspecifieke beoordelingsmethodiek voor de humane blootstelling. [In Dutch] RIVM-report no. 715810001, dated June 1994.

Contains: methodology for estimating human exposure based on calculation formulas from the CSOIL model; several standard soil use categories are defined using standard assumptions as to human exposure; the result is a exposure estimate for a specific kind of site; this method is part of a system for the evaluation of soil quality in dealing with requests for official building permits to be granted by local authorities; the method is yet to be further developed in future work.

Swartjes, F.A., Koolenbrander, L.G.M. & Bockting, G.J.M. (1994) Beoordelingssystematiek bodemkwaliteit ten behoeve van bouwvergunningsaanvragen. Deel II. Methodiek ter bepaling van het verspreidingsrisico. [In Dutch] RIVM-report no. 715810002, dated June 1994.

Contains: method for classification of calculated fluxes into 3 classes of increasing risk of contaminant dispersal; this classification provides a pragmatic assessment of the risk of dispersal; this method is part of a system for the evaluation of soil quality in dealing with requests for official building permits to be granted by local authorities; this methodology will be tested in practice, future adjustments may be necessary.

Crommentuijn, G.H., Plassche, E.J. van de & Canton, J.H. (1994) Guidance document on the derivation of ecotoxicological criteria for serious soil contamination in view of the intervention value for soil clean-up. RIVM-report no. 950011003, dated November 1994.

Contains: description of the methodology used to derive ecotoxicological criteria in a stepwise protocol: data needs, formulas for normalisation & standardisation, data selection & method for calculation of the several HC50-values.

Berg, R. van den, Bockting, G.J.M., Crommentuyn, G.H. & Janssen, P.J.C.M. (1994) Proposals for intervention values for soil clean-up: Second series of chemicals. RIVM-report no. 715810004, dated December 1994.

Contains: physicochemical properties, results of CSOIL calculations, derivation of the serious-soil-contamination-concentrations (scc) using the ecotoxicological and human-toxicological criteria; integration of values yielding proposal for intervention values; this 2nd series consists of 12 chemicals.

Kreule, P., Berg, R. van den, Waitz, M.F.W. & Swartjes, F.A. (1995) Calculation of human-toxicological Serious-Soil-Contamination-Concentrations and proposals for intervention values for clean-up of soil and groundwater: Third series of compounds. RIVM-report no. 715810 010.

Contains: physicochemical properties, results of CSOIL calculations, derivation of the serious-soil-contamination-concentrations (scc) using the ecotoxicological and human-toxicological criteria; integration of values yielding proposal for intervention values; this 3rd series consists of 14 compounds.

APPENDIX II: toxicity data terrestrial species

In this appendix the toxicity data for terrestrial species are presented.

Legend:

soil type	natural soils classified according to the American Soil Classification System, am= artificial medium
% o.m.	% organic matter content
exp. time	exposure time: h= hour(s), d= day(s), w= week(s), m= month(s), min= minute(s)
result, > and ≥	value indicated is highest concentration used in the test
< and ≤	value indicated is lowest concentration used in the test
result stand. soil	result calculated for standard soil containing 10% organic matter (o.m.) and 25% clay

content:

APPENDIX II: Toxicity of beryllium for terrestrial species

species	soil type	pH	% o.m.	% clay	temp °C	exp. time	criterion	result test soil (mg/kg d.w.)	result stand. soil (mg/kg d.w.)	reference
macrophyta										
Brassica oleracea, seed	sand ($BeSO_4$)	6.5	1.1	6	30	98 d	NOEC[a]	50	113	Kaplan et al., 1990

[a]: biomass of above ground parts and roots

APPENDIX II (continued): Toxicity of boron for terrestrial species

species	soil type	pH	% o.m.	% clay	temp °C	exp. time	criterion	result test soil (mg/kg d.w.)	result stand. soil* (mg/kg d.w.)	reference
macrophyta										
Hordeum vulgare	sand (H_3BO_3)	5.6	1.17	3.5	-	-	NOEC[b]	1.0	-	Riley, 1987
Medicago sativa	sandy clay loam[a]	7.3	14	21	-	-	EC50[b]	17.7-32.9	-	Gestring & Soltanpour, 1987
	sandy clay loam[a]	7.3	14	21	-	-	EC50[b]	16.1-30.9	-	Gestring & Soltanpour, 1987
	loamy sand[a]	7.4	11	14	-	-	EC50[b]	13.9-28.1	-	Gestring & Soltanpour, 1987
	loamy sand[a] ($Na_2B_4O_7.10H_2O$)	7.4	11	14	-	-	EC50[b]	17.2-21.5	-	Gestring & Soltanpour, 1987
Sorchum vulgare sudanense	sand (sodium tetraphenylboron , NaTPB)	5.4	1.1	6	-	-	NOEC[b]	4	-	Adriano et al., 1988
	loamy sand (sodium tetraphenylboron, NaTPB)	5.1	1.9	4	-	-	NOEC[b]	4	-	Adriano et al., 1988
	sand (diphenyl boric acid, DPBA)	5.4	1.1	6	-	-	NOEC[b]	8	-	Adriano et al., 1988

*: not possible to calculate result for standard soil, no correction factor available
[a]: soil moisture set at field capacity
[b] growth

APPENDIX II (continued): Toxicity of dioxine (2,3,7,8-TCDD) for terrestrial species

species	soil type	pH	% o.m.	% clay	temp °C	exp. time	criterion	result test soil (mg/kg d.w.)	result stand. soil (mg/kg d.w.)	reference
oligochaeta										
Allolobophora caliginosa	sandy loam[a]	6.7	5.2	18*	20	30-d	NOLC*	5	9.6	Denneman & van Gestel, 1990
Fauna, general[b]	sand	5.6	0.17[2]	4.2			NOEC*	0.0015	0.0075	Denneman & van Gestel, 1990

*: value estimeated from data in literature
[a]: soil moisture 20-30%
[b]: field experiment; results difficult to interpret; influence of higher concentrations not clear.

APPENDIX II (continued): Toxicity of chlordane for terrestrial species

species	soil type	pH	% o.m.	% clay	temp °C	exp. time	criterion	result test soil (mg/kg d.w.)	result stand. soil (mg/kg d.w.)	reference
oligochaeta										
Lumbricus terrestris	potting soil[a]	-	-	-	20	3-d	LC50	>46.6		Denneman & van Gestel, 1990
Eisenia andrei	am[b]	7	10*	5*	22	14-d	LC50	42	42	Denneman & van Gestel, 1990
collembola										
Folsomia candida	plainfield sand[c]	-	0.7[e]	1.7[f]	24	24-h	NOLC	1.0	5	Denneman & van Gestel, 1990
insecta										
Gryllus pennsylvanicus 1st instar	fine sandy loam[d]	7.2	1.4[e]	2.3[f]	27	24-h	LC50	0.85	4.25	Denneman & van Gestel, 1990

*: value estimeated from data in literature
[a]: compound mixed homogeneously through soil; dosages in lb a.i/A converted to conc. in 5 cm top soil
[b]: dark/light 12/12 h; soil moisture 35%
[c]: soil moisture 6.5%; dark
[d]: soil moisture 8.6%
[e]: % om lower than 2%, for conversion to standard soil 2% is used
[f]: % clay lower than 5%, for conversion to standard soil 5% is used

APPENDIX II (continued): Toxicity of heptachlor for terrestrial species

species	soil type	pH	% o.m.	% clay	temp °C	exp. time	criterion	result test soil (mg/kg d.w.)	result stand. soil (mg/kg d.w.)	reference
collembola										
Folsomia candida	plainfield sand[a]	-	0.72[b]	1.7[c]	24	24-h	NOLC*	0.5	2.5	Denneman & van Gestel, 1990
	plainfield sand[a]	-	0.7*, [b]	1.7*, [c]	21	24-h	NOLC*	0.1	0.5	Denneman & van Gestel, 1990
Hypogastrura armata							NOLC*	1.0	5	Denneman & van Gestel, 1990
Onychirius justi porteri							NOLC*	1.0	5	Denneman & van Gestel, 1990
insecta										
Gryllus pennsylvanicus, 1st instar	sandy loam[e]	-	1.4[b]	2.3[c]	27	24-h	LC50	0.09	0.45	Denneman & van Gestel, 1990
	clay loam[f]	-	15.9	23.2	27	24-h	LC50	0.73	0.46	Denneman & van Gestel, 1990
	muck[g]	-	64.1[d]	16.5	27	24-h	LC50	4.19	1.40	Denneman & van Gestel, 1990
	quartz sand	-	0[c]	0[c]	27	18-h	LC50	0.02	0.10	Denneman & van Gestel, 1990
	sand	-	0.5[b]	1.7[c]	27	18-h	LC50	0.07	0.35	Denneman & van Gestel, 1990
	sandy loam	-	1.4[b]	2.3[c]	27	18-h	LC50	0.09	0.45	Denneman & van Gestel, 1990
	silt loam	-	2.0	10.8	27	18-h	LC50	0.22	1.1	Denneman & van Gestel, 1990
	loam	-	6.6	14.9	27	18-h	LC50	0.52	0.79	Denneman & van Gestel, 1990
	clay	-	9.1	47.4	27	18-h	LC50	0.33	0.36	Denneman & van Gestel, 1990
	clay	-	15.9	23.8	27	18-h	LC50	0.73	0.46	Denneman & van Gestel, 1990
	clay	-	18.7	26.1	27	18-h	LC50	1.23	0.66	Denneman & van Gestel, 1990
	peat	-	39.8[d]	22.8	27	18-h	LC50	3.09	1.03	Denneman & van Gestel, 1990
	peat[h]	-	64.6[d]	16.5	27	18-h	LC50	4.19	1.40	Denneman & van Gestel, 1990
Pterostichus melanarius	sand	-	0.7[b]	1.7[c]	20	24-h	NOLC*	0.01	0.05	Denneman & van Gestel, 1990

*: value estimeated from data in literature
[a]: soil moisture 6.5%
[b]: % om lower than 2%, for conversion to standard soil 2% is used
[c]: % clay lower than 5%, for conversion to standard soil 5% is used
[d]: % om higher than 30 %, for conversion to standard soil 30 % is used
[e]: soil moisture 12%, [f]: soil moisture 12%, [g]: soil moisture 162%,
[h]: soil moisture at fieldcapacity: 65%

APPENDIX II (continued): Toxicity of endosulfan for terrestrial species

species	soil type	pH	% o.m.	% clay	temp °C	exp. time	criterion	result test soil (mg/kg d.w.)	result stand. soil (mg/kg d.w.)	reference
macrophyta										
Lactuca sativa	am[a]	7.8	1.4[b]	12*	20	14-d	EC50[c]	>1000	>5000	Denneman & van Gestel, 1990
							NOEC[c]	320	1600	Denneman & van Gestel, 1990
algae (Chlorella, Scenedesmus, Oscillatoria)	red laterite[d]	8.1	2*	-	27	20-d	NOEC*,[c]	25	125	Denneman & van Gestel, 1990
							EC12[c]	50	250	Denneman & van Gestel, 1990
							EC52[c]	100	500	Denneman & van Gestel, 1990
	red laterite[e]	8.1	2*	-	27	20-d	NOEC*,[c]	0	0	Denneman & van Gestel, 1990
							EC39[c]	10	50	Denneman & van Gestel, 1990
							EC60[c]	50	250	Denneman & van Gestel, 1990
oligochaeta										
Eisenia andrei	am[f]	7	10*	5*	22	28-d	LC50	6.7	6.7	Denneman & van Gestel, 1990
Lumbricus terrestris	sand-laom[g]	6.1	11.5*	2.9*	10	14-d	LC50	9.0	7.8	Denneman & van Gestel, 1990
Pheretima posthuma	am	6*	10*	5*	25	24-h	LC50	5.01	5.01	Hans, Gupta & Beg, 1990

*: value estimeated from data in literature
[a]: moisture 25%
[b]: % om lower than 2%, for conversion to standard soil 2% is used
[c]: growth;
[d]: non flooded;
[e]: flooded
[f]: soil moisture 35%
[g]: soil moisture 80-90%; dark; 1-w adaptation

APPENDIX II (continued): Toxicity of fentinacetate for terrestrial species

species	soil type	pH	% o.m.	% clay	temp °C	exp. time	criterion	result test soil (mg/kg d.w.)	result stand. soil (mg/kg d.w.)	reference
oligochaeta										
Eisenia andrei	am[a]	7	10*	5*	22	28-d	LC50	27	27	Denneman & van Gestel, 1990
Lumbricus terrestris	sand-loam	6.1	11.5*	2.9*, [b]	10	14-d	LC50	44	38.3	Denneman & van Gestel, 1990

*: value estimeated from data in literature
[a]: light/dark 12/12 h; soil moisture 35%
[b]: % clay lower than 5%, for conversion to standard soil 5% is used

APPENDIX II (continued): Toxicity of azinphos methyl for terrestrial species

species	soil type	pH	% o.m.	% clay	temp °C	exp. time	criterion	result test soil (mg/kg d.w.)	result stand. soil (mg/kg d.w.)	reference
macrophyta										
Lactuca sativa	am[a]	7.8	1.42[d]	12*	20	14-d	EC50[f]	360	1800	Denneman & van Gestel, 1990
							NOEC[f]	100	500	Denneman & van Gestel, 1990
collembola										
Folsomia candida	sand[b]	-	0.7[d]	1.7[e]	24	24-h	NOLC*	0.5	2.5	Denneman & van Gestel, 1990
							LC50*	1.0	5	Denneman & van Gestel, 1990
							LC100	5	25	Denneman & van Gestel, 1990
					13		NOLC*	0.5	2.5	Denneman & van Gestel, 1990
							LC50*	1.8	9	Denneman & van Gestel, 1990
							LC100	5	25	Denneman & van Gestel, 1990
insecta										
Nebria brevicollis	sandy loam[c]	-	3*	18*	20	24-h	LC50	110	367	Denneman & van Gestel, 1990
Trechus quadristria							LC50	90	300	Denneman & van Gestel, 1990
Feronia melonaria							LC50	120	400	Denneman & van Gestel, 1990

*: value estimeated from data in literature
[a]: soil moisture 25%
[b]: soil moisture 6.5%; test performed in dark
[c]: soil moisture 16%
[d]: % om lower than 2%, for conversion to standard soil 2% is used
[e]: % clay lower than 5%, for conversion to standard soil 5% is used
[f]: growth

APPENDIX III: toxicity data microbial and enzymatic processes

In this appendix the toxicity data for microbial and enzymatic processes are presented.

Legend:

soil type	natural soils classified according to the American Soil Classification System, am= artificial medium
% o.m.	% organic matter content
exp. time	exposure time: h= hour(s), d= day(s), w= week(s), m= month(s), min= minute(s)
result, > and ≥	value indicated is highest concentration used in the test
< and ≤	value indicated is lowest concentration used in the test
result stand. soil	result calculated for standard soil containing 10% organic matter (o.m.) and 25% clay

content:

APPENDIX III : Toxicity of beryllium for microbial and enzymatic processes

process	soil type	pH	% o.m.	% clay	temp °C	exp. time	criterion	result test soil (mg/kg d.w.)	result stand. soil (mg/kg d.w.)	reference
soil respiration	silt loam	6.7	3.1	27	20	9-d	EC11[a]	0.5	0.47	van de Plassche et al., 1992
							EC49[a]	450	425	van de Plassche et al., 1992
		6.2	64	-	20	9-d	EC3[a]	0.5		van de Plassche et al., 1992
							EC14[a]	450		van de Plassche et al., 1992
	clay	7.0	5.5	51	20	9-d	EC6[a]	0.5	0.29	van de Plassche et al., 1992
	silt loam	7.2	1.7	21	20	9-d	EC18[a]	5.9	6.7	van de Plassche et al., 1992
							EC43[a]	450	511	van de Plassche et al., 1992
	sandy loam	8.2	4.7	11	20	9-d	EC3[a]	0.5	0.85	van de Plassche et al., 1992
	($BeSO_4$)						EC29[a]	.450	767	van de Plassche et al., 1992
N-mineralisation	sandy cambisol[c]	6.0	2.0	9	-	8-9 y	EC43[a]	30	56.3	van de Plassche et al., 1992
	($BeSO_4$)						EC48[a]	80	150	van de Plassche et al., 1992
nitrification	sandy cambisol[c]	6.0	2.0	9	-	8-9 y	EC2[a]	30	56.3	van de Plassche et al., 1992
	($BeSO_4$)						EC8[b]	80	150	van de Plassche et al., 1992

[a]: inhibition
[b]: stimulation
[c]: field experiment

APPENDIX III (continued): Toxicity of boron for microbial and enzymatic processes

process	soil type	pH	% o.m.	% clay	temp °C	exp. time	criterion	result test soil (mg/kg d.w.)	result stand. soil* (mg/kg d.w.)	reference
nitrification	laom	5.8	4.39	23	30	10-d	EC92[a]	54.05	-	Liang & Tabatabai, 1978
						20-d	EC14[a]	54.05	-	Liang & Tabatabai, 1977
	clay loam	7.8	6.36	30	30	10-d	EC74[a]	54.05	-	Liang & Tabatabai, 1978
						20-d	EC7[a]	54.05	-	Liang & Tabatabai, 1977
	silty clay loam	7.4	9.27	34	30	10-d	EC74[a]	54.05	-	Liang & Tabatabai, 1978
	($Na_2B_4O_7$)					20-d	EC14[a]	54.05	-	Liang & Tabatabai, 1977
		6.6	5.02	45	30	20-d	EC7[a]	54.05	-	Liang & Tabatabai, 1977
dehydrogenase	composite[b]	-	2.27	-	27	24-h	EC50[a]	363	-	Rogers & Li, 1985
	composite, (BO_3^{3-})	-	2.27	-	27	24-h	EC50[a]	176	-	Rogers & Li, 1985
arylsulfatase	-($Na_2B_4O_7$)	6.2	4.64	29	-	30-min	EC70[a]	270.25	-	Al-Khafaji & Tabatabai, 1979
	-	7.6	5.51	30	-	30-min	EC65[a]	270.25	-	Al-Khafaji & Tabatabai, 1979
	-	6.5	4.95	26	-	30-min	EC72[a]	270.25	-	Al-Khafaji & Tabatabai, 1979
	-	7.0	9.04	34	-	30-min	EC60[a]	270.25	-	Al-Khafaji & Tabatabai, 1979
urease	-	5.1	2.57	17	37	2-h	EC98[a]	54.05	-	Tabatabai, 1977
	-	6.1	5.64	30	37	2-h	EC13[a]	54.05	-	Tabatabai, 1977
	loam	5.8	4.39	23	37	2-h	EC18[a]	54.05	-	Tabatabai, 1977
	clay loam	7.8	6.36	30	37	2-h	EC14[a]	54.05	-	Tabatabai, 1977
							EC11[a]	5.4	-	Tabatabai, 1977
	clay loam	6.8	7.40	42	37	2-h	EC27[a]	54.05	-	Tabatabai, 1977
	silty clay loam	7.4	9.27	34	37	2-h	EC15[a]	54.05	-	Tabatabai, 1977
	($Na_2B_4O_7$)						EC13[a]	5.4	-	Tabatabai, 1977

*: not possible to calculate result for standard soil, no correction factor available
[a]: inhibition
[b]: soil enriched with 1% alalfa

APPENDIX III (continued): Toxicity of chlordane for microbial and enzymatic processes

process	soil type	pH	% o.m.	% clay	temp °C	exp. time	criterion	result test soil (mg/kg d.w.)	result stand. soil (mg/kg d.w.)	reference
soil respiration	sandy loam	7.4	2.9	18*	28	67-h	NOEC*	10	34.5	Denneman & van Gestel, 1990
invertase	sandy loam	7.4	2.9	18*	28	2-d	NOEC*	10	34.5	Denneman & van Gestel, 1990
amylase	sandy loam	7.4	2.9	18*	28	3-d	NOEC*	10	34.5	Denneman & van Gestel, 1990

*: value estimated from data in literature reference

APPENDIX III (continued): Toxicity of endosulfan for microbial and enzymatic processes

process	soil type	pH	% o.m.	% clay	temp °C	exp. time	criterion	result test soil (mg/kg d.w.)	result stand. soil (mg/kg d.w.)	reference
nitrification	sandy loam[b]	5.7	3.2	8	25	30-d	EC50[a]	960	3000	Stratton, 1990
						40-d	EC50[a]	550	1719	Stratton, 1990
	silt loam[b]	5.0	5.4	14	25	50-d	EC50[a]	525	972	Stratton, 1990
						65-d	EC50[a]	3	90	722Stratton, 1990
	silt loam[b]	5.0	5.4	14	25	65-d	EC50[a]	870	1611	Stratton, 1990

[a]: inhibition
[b]: formulation Thiodan (400 g/l) was used; results expressed in mg a.i./kg; 30- and 50-d EC50 determined in soil perfusion experiment, 40-d and 65-d EC50 determined in batch incubation experiment

APPENDIX III (continued): Toxicity of silver for microbial and enzymatic processes

process	soil type	pH	% om	% clay	temp °C	exp. time	criterion	result test soil (mg/kg d.w.)	result stand. soil* (mg/kg d.w.)	reference
catalase	marl ($AgSO_4$)	8.4	7.14	0.21	-	28 d	EC15	50	-	Perez Mateos et al, 1988
	marl	8.4	7.14	0.21	-	48 h	EC27	400	-	Perez Mateos et al, 1988
dehydrogenase	marl ($AgSO_4$)	8.4	7.14	0.21	-	28 d	EC65	50	-	Perez Mateos et al, 1988
	marl	8.4	7.14	0.21	-	48 h	EC97	400	-	Perez Mateos et al, 1988
nitrification	loam	5.8	4.39	23	30	10 d	EC96	539	-	Liang & Tabatabai, 1978
	loam	5.8	4.39	23	30	20 d	EC73	539	-	Liang & Tabatabai, 1977
	clay loam	7.8	6.36	30	30	10 d	EC84	539	-	Liang & Tabatabai, 1978
	clay loam	7.8	6.36	30	30	20 d	EC59	539	-	Liang & Tabatabai, 1977
	silty clay loam	7.4	9.27	34	30	10 d	EC98	539	-	Liang & Tabatabai, 1978
	silty clay loam	7.4	9.27	34	30	20 d	EC52	539	-	Liang & Tabatabai, 1977
	silty clay	6.6	5.02	45	30	20 d	EC41	539	-	Liang & Tabatabai, 1977
arylsulfatase	clay loam	6.2	4.64	29	-	30 min	EC94	2697	-	Al-Khafaji & Tabatabai, 1979
	clay loam	7.6	5.5	30	-	30 min	EC99	2697	-	Al-Khafaji & Tabatabai, 1979
	clay loam	7.6	5.5	30	-	30 min	EC80	269.7	-	Al-Khafaji & Tabatabai, 1979
	loam	6.5	4.95	26	-	30 min	EC97	2697	-	Al-Khafaji & Tabatabai, 1979
	loam	6.5	4.95	26	-	30 min	EC53	269.7	-	Al-Khafaji & Tabatabai, 1979
	clay loam	7.0	9.04	34	-	30 min	EC95	2697	-	Al-Khafaji & Tabatabai, 1979

*: not possible to calculate result for standard soil, no correction factor available

APPENDIX III (continued): Toxicity of silver for microbial and enzymatic processes

process	soil type	pH	% om	% clay	temp °C	exp. time	criterion	result test soil (mg/kg d.w.)	result stand. soil* (mg/kg d.w.)	reference
urease	silt loam	5.1	2.57	17	37	2 h	EC94	539	-	Tabatabai, 1977
	silty clay loam	6.1	5.64	30	37	2 h	EC97	539	-	Tabatabai, 1977
	loam	5.8	4.39	23	37	2 h	EC98	539	-	Tabatabai, 1977
	silty clay loam	7.8	6.36	30	37	2 h	EC89	539	-	Tabatabai, 1977
	silty clay loam	7.8	6.36	30	37	2 h	EC46	53.9	-	Tabatabai, 1977
	silty clay	6.8	7.40	42	37	2 h	EC96	539	-	Tabatabai, 1977
	silty clay loam	7.4	9.27	34	37	2 h	EC84	539	-	Tabatabai, 1977
	silty clay loam	7.4	9.27	34	37	2 h	EC31	53.9	-	Tabatabai, 1977

*: not possible to calculate result for standard soil, no correction factor available

APPENDIX IV: toxicity data freshwater species

In this appendix the toxicity data for freshwater species are presented. For each substance the data are divided in chronic toxicity data and acute toxicity data.

Legend:

A	Y= test substance analyzed in test solution N= test substance not analyzed in solution or no data
test type	S= static, R= renewal, CF= continuous flow
test sub. purity	ag= analytical grade, rg= reagent grade, tech= technical grade
test water	am= artificial medium, DSW:=Dutch Standard Water, dtw:= dechlorinated tap water, nw= natural water, rw= reconstituted water, rdw= reconstituted deionized sterile-filtered water, sw= standard water, tw= tap water
exp. time	exposure time: h= hour(s), d= day(s), w= week(s), m= month(s), min= minute(s)
result > and ≥	value indicated is highest concentration used in the test
< and ≤	value indicated is lowest concentration used in the test
α	given value based on measured concentrations

Content:

1,1-dichloroethane (94)
1,1,1-trichloroethane (95)
1,2-dichloroethene (97)
ethyleneglycol (98)
diethyleneglycol (99)
acrylonitril (100)
formaldehyde (101)
methanol (103)
butanol (105)
butylacetate (106)
methyl *tert*-butyl ether (107)

APPENDIX IV: Toxicity of antimony for freshwater species

species	A	Test	Test type	Test sub. purity	pH water	Hardness mg $CaCO_3$/l	Exp. time	Crite-rion	Result µg/l	Reference
chronic toxicity										
Cyanophyta										
Microcystus aeruginosa, $K[Sb(OH)_6]$	n	S	-	am	7.0	28.7	8 d	NOEC	23200[a]	Bringmann & Kühn, 1976
Protozoa										
Entosiphon sulcatum, $K[Sb(OH)_6]$	n	S	-	am	6.9	35.3	72 h	NOEC	121240[a]	Bringmann & Kühn, 1980a
acute toxicity										
Crustacea										
Daphnia magna, Sb_2O_3	n	S	-	nw	7.2-7.8	235-260	48 h	EC50	420000	v.d. Plassche et al., 1992
Annelida										
Tubifex tubifex, Sb_2O_3	n	S	-	nw	7.6	245	96 h	EC50	680000[b]	v.d. Plassche et al., 1992
Pisces										
Leuciscus idus melanotus, $K[Sb(OH)_6]$	n	S	-	tw	7-8	255	48 h	LC50	1100000	v.d. Plassche et al., 1992

[a]: growth
[b]: immobilization

APPENDIX IV (continued): Toxicity of beryllium for freshwater species

species	A	Test type	Test sub. purity	Test water	pH	Hardness mg $CaCO_3$/l	Exp. time	Crite-rion	Result µg/l	Reference
chronic toxicity										
Bacteria										
Pseudomonas putida, $Be(NO_3)_2$	n	S	-	am	7.0	42.5	16 h	NOEC	1.36[a]	van de Plassche et al, 1992
Cyanophyta										
Microcystis aeruginosa , $Be(NO_3)_2$	n	S	-	am	7.0	28.7	8 d	NOEC	30[a]	van de Plassche et al., 1992
Chlorophyta										
Scenedesmus quadricauda, $Be(NO_3)_2$	n	S	-	am	7.0	28.7	8 d	NOEC	2.0[a]	van de Plassche et al., 1992
Protozoa										
Chilomonas paramaecium E. $Be(NO_3)_2$	n	S	-	am	6.9	42.3	48 h	NOEC	510[a]	Bringmann et al., 1980
Entosiphon sulcatum S., $Be(NO_3)_2$	n	S	-	am	6.9	35.3	72 h	NOEC	4[a]	Bringmann & Kühn, 1980a
Uronema parduczi C. , $Be(NO_3)_2$	n	S	-	am	6.9	35.3	20 h	NOEC	17[a]	Bringmann & Kühn, 1980b
Pisces										
Cyprinus carpio, eggs, $Be(NO_3)_2$	y	S	-	nw	-	-	3 d	NOEC	80[b] α	van de Plassche et al., 1992
acute toxicity										
Crustacea										
Daphnia magna, $BeSO_4$	n	S	-	nw	7.2-7.8	235-260	48 h	EC50	2800	van de Plassche et al., 1992
Daphnia magna, <24 , $Be(NO_3)_2$	n	S	-	tw	7.6-7.7	272	24 h	EC50	1200	van de Plassche et al., 1992

[a]: growth
[b]: reproduction

APPENDIX IV (continued): Toxicity of beryllium for freshwater species

species	A	Test type	Test sub. purity	Test water	pH	Hardness mg $CaCO_3$/l	Exp. time	Crite-rion	Result µg/l	Reference
Annelida										
Tubifex tubifex, $BeSO_4$	n	S	-	nw	7.6	245	96 h	EC50	10000	van de Plassche et al., 1992
Pisces										
Ictalurus punctatus, $BeSO_4$	y	CF	-	-	8.0	140	96 h	LC50	6100	van de Plassche et al., 1992
Lebistus reticulatus, 3 m, $BeSO_4$	n	S	-	rw	5.1-7.0	400	96 h	LC50	19000	van de Plassche et al., 1992
Lebistus reticulatus, 3 m, $BeSO_4$	n	S	-	rw	5.9-7.3	275	96 h	LC50	13000	van de Plassche et al., 1992
Lebistus reticulatus, 3 m, $BeSO_4$	n	S	-	rw	6.0-6.7	150	96 h	LC50	5800	van de Plassche et al., 1992
Lebistus reticulatus, 3 m, $BeSO_4$	n	S	-	rw	6.4-6.5	22	96 h	LC50	160	van de Plassche et al., 1992
Leuciscus idus melanotus, $Be(NO_3)_2$	n	S	-	tw	7-8	255	48 h	LC50	5900-7700[c]	van de Plassche et al., 1992
Leuciscus idus melanotus, $Be(NO_3)_2$	n	S	-	tw	7-8	255	48 h	LC50	540[c]	van de Plassche et al., 1992
Amphibia										
Ambystoma opacum, larvae, $BeSO_4$	n	S	-	nw	-	400	96 h	LC50	32000	van de Plassche et al., 1992
Ambystoma opacum, larvae, $BeSO_4$	n	S	-	nw	-	20-25	96 h	LC50	3200	van de Plassche et al., 1992
Ambystoma maculatum, larvae, $BeSO_4$	n	S	-	nw	-	400	96 h	LC50	22000	van de Plassche et al., 1992
Ambystoma maculatum, larvae, $BeSO_4$	n	S	-	nw	-	20-25	96 h	LC50	6000	van de Plassche et al., 1992

[c] different values were obtained at two laboratoria

APPENDIX IV (continued): Toxicity of boron for freshwater species

species	A	Test type	Test sub. purity	Test water	pH	Hardness mg $CaCO_3$/l	Exp. time	Crite-rion	Result µg/l	Reference
chronic toxicity										
Bacteria										
Pseudomonas putida, $Na_2B_4O_7$	n	S	-	am	7.0	42.5	16 h	NOEC	289700[a]	Bringmann & Kühn, 1980a
Protozoa										
Chilomonas paramaecium, $Na_2B_4O_7$	n	S	-	am	6.9	42.3	48 h	NOEC	10586[a]	Bringmann et al., 1980
Entosiphon sulcatum, $Na_2B_4O_7$	n	S	-	am	6.9	35.3	72 h	NOEC	270[a]	Bringmann, 1978
Uronema parducz, $Na_2B_4O_7$	n	S	-	am	6.9	35.3	20 h	NOEC	30360[a]	Bringmann & Kühn, 1980a
Cyanophyta										
Microcystis aeruginosa, $Na_2B_4O_7$	n	S	-	am	7.0	28.7	8 d	NOEC	20334[a]	Bringmann & Kühn, 1976
Chlorophyta										
Scenedesmus quadricauda, $Na_2B_4O_7$	n	S	-	am	7.0	28.7	7 d	NOEC	160[a]	Bringmann & Kühn, 1980a
Crustacea										
Daphnia magna, H_3BO_3	y	R	anal.	nw	7.1-8.7	166	21 d	LC50	53200	Lewis & Valentine, 1981
								NOEC	27000[a] α	Lewis & valentine, 1981
								NOEC	6000[b] α	Lewis & Valentine, 1981
(<24 h), H_3BO_3	y	R	-	nw	8.1	148	21 d	LC50	52200	Gersich, 1984
								NOEC	29400[c] α	Gersich, 1984
								NOEC	6400[d] α	Gersich, 1984
Insecta										
Chironomus decorus (4th instar) $Na_2B_4O_7.10H_2O$	n	R	-	rw	8.2	90	96 h	NOEC	10000[a]	Maier & Knight, 1991

[a]: growth,
[b]: reproduction
[c]: mortality,
[d]: growth and reproduction

APPENDIX IV (continued): Toxicity of 2,3,7,8-TCDD for freshwater species

species	A	Test type	Test sub. purity	Test water	pH	Hardness mg $CaCO_3$/l	Exp. time	Crite-rion	Result µg/l	Reference
chronic toxicity										
Annelida										
Paranais spec., adult	n	S	98.7%	nw	6.9	64	55 d	NOEC	± 0.2[a]	Okkerman et al., 1992
Mollusca										
Physa spec., adult	n	S	98.7%	nw	6.9	64	36 d	NOEC	± 0.2[a]	Okkerman et al., 1992
Pisces										
Oncorhynchus mykiss, larvae	y	F	-	nw	7.7	153	28 d	NOEC	38E-6[b]	Okkerman et al., 1992
Oryzias latipes, egg	n	S	98%	am	-	185	14 d	NOEC	2E-3[c]	Okkerman et al., 1992
Oryzias latipes, egg	y	S	98%	am	-	185	14 d	NOEC	< 4E-4[d]	Okkerman et al., 1992
Oryzias latipes, egg	y	S	98%	am	-	185	14 d	NOEC	59E-4[e]	Okkerman et al., 1992
Pimephales promelas, juv.	y	R	-	nw	7.3	110	28 d	LC50	17E-4	Okkerman et al., 1992

[a]: reproduction and survival
[b]: recovery 28 days; mortality and growth
[c]: mortality and hatchability
[d]: mortality
[e]: hatchability

APPENDIX IV (continued): Toxicity of 2,3,7,8-TCDD for freshwater species

species	A	Test type	Test sub. purity	Test water	pH	Hardness mg $CaCO_3$/l	Exp. time	Crite-rion	Result µg/l	Reference
acute toxicity										
Pisces										
Esox lucius, egg	n	R	98.6%	tw	6.9	94-102	4 d	NOEC	< 1E-4[f]	Okkerman et al., 1992
Jordanella floridae, egg	y	S	-	am	8.2	210	4 d	NOEC	3E-4[g]	Okkerman et al., 1992
Jordanella floridae, 35 d	y	S	-	am	8.2	210	4 d	NOEC	< 1E-3	Okkerman et al., 1992
Oncorhynchus kisutch, juv.	n	S	98.7%	nw	6.9	64	4 d	NOEC	< 56E-6[h]	Okkerman et al., 1992
Oncorhynchus mykiss, larvae	n	R	>=98%	tw	7.5-7.9	50-87	4 d	NOEC	1E-3[i]	Okkerman et al., 1992
Oncorhynchus mykiss, egg	n	R	98.6%	tw	7.4-7.5	96-105	4 d	NOEC	< 1E-4[j]	Okkerman et al., 1992
Oncorhynchus mykiss, egg	n	R	98.6%	tw	7.4-7.5	96-105	4 d	NOEC	1E-4[k]	Okkerman et al., 1992
Oncorhynchus mykiss, juv.	n	R	98.6%	tw	7.4-7.5	96-105	4 d	NOEC	< 1E-2[l]	Okkerman et al., 1992
Oncorhynchus mykiss, juv.	n	R	98.6%	tw	7.4-7.5	96-105	4 d	NOEC	1E-2[m]	Okkerman et al., 1992
Oncorhynchus mykiss, larvae	n	R	98.6%	tw	7.4-7.5	96-105	4 d	NOEC	16E-4[n]	Okkerman et al., 1992
Pimephales promelas, juv.	y	S	-	nw	7.3	110	4 d	NOEC	7E-4[o]	Okkerman et al., 1992

[f]: recovery 19 days; developmental rate, growth and survival
[g]: recovery 100 days; mortality
[h]: recovery 55 days; mortality
[i]: recovery 17 days; mortality
[j]: recovery 164 days; growth
[k]: recovery 164 days; mortality
[l]: recovery 68 days; growth
[m]: recovery 68 days; mortality
[n]: recovery 16 days; mortality
[o]: recovery 60 days; mortality

APPENDIX IV (continued): Toxicity of chlordane for freshwater species

species	A	Test type	Test sub. purity	Test water	pH	Hardness mg $CaCO_3$/l	Exp. time	Crite-rion	Result µg/l	Reference
chronic toxicity										
Crustacea										
Daphnia magna, first instar	y	F	tech	nw	7.7	156	28 d	NOEC	12.1[a] α	van de Plassche, 1994
Hyallela azteca, (newly hatched	y	F	tech	nw	7.8	148	65 d	NOEC	5.3[b] α	van de Plassche, 1994
Insecta										
Chironomus sp.	y	F	tech	nw	7.9	150	emerg.	NOEC	0.7[c] α	van de Plassche, 1994
Pisces										
Lepomis macrochirus, juvenile	y	F	tech	nw	7.6	156	9.5 m	NOEC	0.54[d] α	van de Plassche, 1994
Pimephales promelas, 5-d old	y	F	tech	nw	7.7	156	60 d	NOEC	0.75[e] α	van de Plassche, 1994
Salvelinus fontinalis, yearling	y	F	tech	nw	7.3	150	13 m	NOEC	0.11[f]	van de Plassche, 1994
acute toxicity										
Insecta										
Pteronarcys californica, naiad	n	S	tech	nw	7.1	44	96 h	LC50	15[g]	van de Plassche, 1994

[a]: mortality ,
[b]: mortality and growth
[c]: % emergence, exposure until emergence
[d]: reproduction
[e]: mortality of adults during spawning
[f]: NOEC-value calculated as LOEC/3 (at 0.32 µg/l 35% decrease in hatchability; number of embryos initially found dead increased with 13.8% in comparison with control group).
[g]: ethanol (<=1 ml/l) was used as solvent

APPENDIX IV (continued): Toxicity of chlordane for freshwater species

species	A	Test type	Test sub. purity	Test water	pH	Hardness mg $CaCO_3$/l	Exp. time	Crite-rion	Result µg/l	Reference
Crustacea										
Daphnia magna	n	S	tech	nw	7.7	156	96 h	EC50	28.4[h]	van de Plassche, 1994
Daphnia pulex, 1st instar	n	S	100%	rw	7.4-7.8	44	48 h	EC50	29[i]	van de Plassche, 1994
Gammarus lacustris, 2-m old	n	S	tech	nw	7.1	31	96 h	LC50	26[g]	van de Plassche, 1994
Gammarus fasciatus, mature	n	S	tech	nw	7.1	31	96 h	LC50	40[g]	van de Plassche, 1994
Simocephalus serrulatus, 1st instar	n	S	100%	rw	7.4-7.8	44	48 h	EC50	20[i]	van de Plassche, 1994
Pisces										
Catostomus commersoni (0.40 g)	n	F	100%	-	7.5	314	96 h	LC50	17	van de Plassche, 1994
Ictalurus punctatus, (1.90 g)	n	S	100%	-	7.1	44	96 h	LC50	6.7	van de Plassche, 1994
(0.90 g)	n	S	100%	-	7.4	44	96 h	LC50	0.8	van de Plassche, 1994
Lepomis macrochirus	n	-	-	-	-	-	96 h	LC50	57	van de Plassche, 1994
(0.6-1.5 g)	n	S	tech	am	7.1	45	96 h	LC50	77[j]	van de Plassche, 1994
	n	S	tech	nw	7.6	156	96 h	LC50	59	van de Plassche, 1994
Micropteres salmoides	n	-	-	-	-	-	96 h	LC50	3	van de Plassche, 1994
Oncorhynchus clarki, (1.00 g)	n	S	100%	-	7.4	272	96 h	LC50	23	van de Plassche, 1994
Oncorhynchus kisutch, (0.60 g)	n	S	100%	-	7.1	44	9h h	LC50	15	van de Plassche, 1994
Oncorhynchus mykiss, (1.0-1.20 g)	n	S	tech	am	7.4	40	96 h	LC50	20[k]	van de Plassche, 1994
(0.80-46.00 g)	n	S	100%	-	7.1	44	96 h	LC50	10-135[1]	van de Plassche, 1994
(0.25 g)	n	S	100%	-	7.5	42	96 h	LC50	29	van de Plassche, 1994
Perca flavescens (0.60 g)	n	F	100%	-	7.1	44	96 h	LC50	9.6	van de Plassche, 1994
Pimephales promelas (0.40 g)	n	S	100%	-	7.5	314	96 h	LC50	560[1]	van de Plassche, 1994
	n	S	tech	nw	7.7	156	96 h	LC50	36.9	van de Plassche, 1994
Salmo trutta (0.60 g)	n	F	100%	-	7.5	314	96 h	LC50	11.1	van de Plassche, 1994
Salvelinus fontinalis	n	S	tech	nw	7.3	150	96 h	LC50	47	van de Plassche, 1994

[1]: value above the water solubility (9-100 µg/l),
[g]: ethanol (<=1 ml/l) was used as solvent
[h]: immobilization,
[i]: immobilization; acetone was used as solvent (quantity not reported)
[j]: ethanol was used as solvent (quantity not reported)
[k]: acetone (1 ml/l) was used as solvent; LC50-values varied with the commercial diets fed to the fish before testing, reported value is the geometric mean of a range of 6 values

APPENDIX IV (continued): Toxicity of heptachlor for freshwater species

species	A	Test type	Test sub. purity	Test water	pH	Hardness mg $CaCO_3$/l	Exp. time	Crite-rion	Result µg/l	Reference
chronic toxicity										
Crustacea										
Daphnia magna, ≤24 h	n	F	98%	nw	6.8-7.2	35-42	64 d	NOEC	12.5[a]	van de Plassche, 1994
Pisces										
Pimephales promelas, 1 d	y	F	98%	nw	6.6-7.0	21-40	40 w	NOEC	0.86[b] α	van de Plassche, 1994
acute toxicity										
Crustacea										
Daphnia pulex, 1st instar	n	S	90%	rdw	7.4-7.8	44	48 h	EC50	42[c]	van de Plassche, 1994
Gammarus fasciatus	n	S	tech	rdw	7.4	≥272	96 h	LC50	40[d]	van de Plassche, 1994
	n	S	tech	rdw	7.1	31	96 h	LC50	56[d]	van de Plassche, 1994
Gammarus lacustris, 2 m	n	S	tech	rdw	7.1	31	96 h	LC50	29[d]	van de Plassche, 1994
Orconectes nais, 3-5 w	n	S	tech	nw	7.4	≥272	96 h	LC50	7.8[d]	van de Plassche, 1994
Simocephalus cerrulatus, 1st instar	n	S	90%	rdw	7.4-7.8	44	48 h	EC50	47[c]	van de Plassche, 1994
Simocephalus serrulatus, 1st instar	n	S	99%	-	7.1	44	48 h	EC50	80[1,e]	van de Plassche, 1994
Insecta										
Claassenia sabulosa, last instar	n	S	tech	rdw	7.1	44	96 h	LC50	2.8[c]	van de Plassche, 1994
Pteronarcella badia, last instar	n	S	tech	rdw	7.1	44	96 h	LC50	0.9[c]	van de Plassche, 1994
Pteronarcys californica, last instar	n	S	tech	rdw	7.1	44	96 h	LC50	1.1[c]	van de Plassche, 1994

1: above water solubility (56 µg/l)
[a]: mortality; nominal concentrations, testwater samples were contaminated with trace organics (not reported which) from acetone
[b]: mortality and reproduction; unexplained high mortality occurred in one of the two replica's at 0.86 µg/l
[c]: immobility; ethanol: conc's and solvent control not reported; animals from natural population acclimatized for at least 48 h
[d]: ethanol ≤1ml/l; addition of solvent to the control is not reported
[e]: immobility

APPENDIX IV (continued): Toxicity of heptachlor for freshwater species

species	A	Test type	Test sub. purity	Test water	pH	Hardness mg $CaCO_3$/l	Exp. time	Crite-rion	Result µg/l	Reference
Pisces										
Brachidanio rerio, 0.4 g	n	-	99.3%	-	7.9	-	96 h	LC50	170[1]	van de Plassche, 1994
Esox lucius, 0.7 g	n	S	99%	-	7.4	272	96 h	LC50	6.2	van de Plassche, 1994
Ictalurus melas, 0.9 g	n	S	99%	-	7.4	44	96 h	LC50	63[1]	van de Plassche, 1994
Ictalurus punctatus, 1 g	n	S	99%	-	7.1	44	96 h	LC50	25	van de Plassche, 1994
Lebistes reticulates, 0.6 g	n	-	99.3%	-	7.9	-	96 h	LC50	85[1]	van de Plassche, 1994
Lepomis macrochirus, 1.0 g	n	S	99%	-	7.1	44	96 h	LC50	13	van de Plassche, 1994
Lepomis macrochirus, 0.8 g	n	S	99%	-	7.4	40	96 h	LC50	17	van de Plassche, 1994
Lepomis macrochirus	n	-	-	-	-	-	96 h	LC50	19	van de Plassche, 1994
Lepomis macrochirus	n	-	-	-	-	-	96 h	LC50	190[1]	van de Plassche, 1994
Lepomis microlophus, 1.1 g	n	S	99%	-	7.1	44	96 h	LC50	17	van de Plassche, 1994
Micropterus salmoides, 1.1 g	n	S	99%	-	7.4	272	96 h	LC50	10	van de Plassche, 1994
Oncorhynchus mykiss, 1.4 g	n	-	-	-	-	-	96 h	LC50	19	van de Plassche, 1994
Oncorhynchus mykiss, 1.4 g	n	S	99%	-	7.1	44	96 h	LC50	32	van de Plassche, 1994
0.8 g	n	S	99%	-	7.4	272	96 h	LC50	43	van de Plassche, 1994
0.8 g	n	S	99%	-	7.1	44	96 h	LC50	7.1	van de Plassche, 1994
Oncorhynchus mykiss	n	-	-	-	-	-	96 h	LC50	150[1]	van de Plassche, 1994
Oncorhynchus mykiss, 0.6-1.5 g	n	S	tech	am	7.1	45	96 h	LC50	7.0[f]	van de Plassche, 1994
Pimephales promelas	n	-	-	-	-	-	96 h	LC50	59[1]	van de Plassche, 1994
Pimephales promelas, 1.3 g	n	S	99%	-	7.1	44	96 h	LC50	23	van de Plassche, 1994
Pimephales promelas	n	S	-	-	-	-	96 h	LC50	56	van de Plassche, 1994
Salmo kisutch	n	-	-	-	-	-	96 h	LC50	59[1]	van de Plassche, 1994
Salmo tshawytscha	n	-	-	-	-	-	96 h	LC50	17	van de Plassche, 1994
Amphibia										
Bufo woodhousii fowleri	-	S	99%	-	7.1	44	96 h	LC50	440[1]	van de Plassche, 1994

1: above water solubility (56 µg/l

[f]: amount of aceton not reported, solvent control with max. used solvent conc; mortality in control not reported

APPENDIX IV (continued): Toxicity of endosulfan for freshwater species

species	A	Test type	Test sub. purity	Test water	pH	Hardness mg $CaCO_3$/l	Exp. time	Crite-rion	Result µg/l		Reference
chronic toxicity											
Chlorophyta											
Chlorella vulgaris	n	S/R	35%	-	-	-	14 d	NOEC	700[a]		van de Plassche, 1994
Protozoa											
Paramecium aurelia	n	S	94%	am	-	-	5 d	NOEC	100[b]		van de Plassche, 1994
Crustacea											
Daphnia magna, < 24 h	y	F	99%	nw	6.8-7.1	30-39	64 d	NOEC	2.7[c]	α	van de Plassche, 1994
Pisces											
Sarotherodon mossambicus, 3-4 m	y	F	35%	tw	8.1-8.3	286-296	9 w	NOEC	0.2[d]	α	van de Plassche, 1994

[a]: growth; 50% renewal every 24 h; 35% endosulfan, 5% emulgator, 2% epichlorhydrine, 10% aromatic mineral oil, 48% aromatic mixture with high boiling point; concentration expressed as 100% endosulfan (see Rao et al., 1980)
[b]: growth
[c]: mortality; given actual conc is the sum of α = 60% and ß = 40%
[d]: reproduction as fry mortality

APPENDIX IV (continued): Toxicity of tributyltin oxide for freshwater species

species	A	Test type	Test sub. purity	Test water	pH	Hardness mg $CaCO_3$/l	Exp. time	Crite-rion	Result µg/l	Reference
chronic toxicity										
Chlorophyta										
Chlorella pyrenoidosa	-	-	-	-	-	-	4 d	NOEC	18[a]	van de Meent et al., 1990
Scenedesmus pannonicus	-	-	-	-	-	-	4 d	NOEC[b]	32[a]	van de Meent et al., 1990
Mollusca										
Lymnea stagnalis (~3 m)	-	-	-	-	-	-	33 d	NOEC	0.32[b]	van de Meent et al., 1990
Crustaceans										
Daphnia magna (24 h)	-	-	-	-	-	-	21 d	NOEC	0.16[b]	van de Meent et al., 1990
Daphnia magna (< 1 d)	-	-	-	-	-	-	20 d	NOEC	0.56[a]	van de Meent et al., 1990
Pisces										
Poecilia reticulata (3-4 w)	-	-	-	-	-	-	91 d	NOEC	0.32[a]	van de Meent et al., 1990

[a]: growth
[b]: reproduction

APPENDIX IV (continued): Toxicity of fentinacetate for freshwater species

species	A	Test type	Test sub. purity	Test water	pH	Hardness mg $CaCO_3$/l	Exp. time	Crite-rion	Result µg/l	Reference
chronic toxicity										
Algae										
Scenedesmus subspicatus	-	-	-	-	-	-	72 h	NOEC	10	BLAKQZ, 1991
acute toxicity										
Mollusca										
Australorbis glabratus (adult)	-	S	-	-	-	-	24 h	LC50	50[a]	Hall & Pinkney, 1985
	-	S	-	-	-	-	24 h	LC50	177, 335, 660[b]	Hall & Pinkney, 1985
(eggs, 1-6 h)	-	S	-	-	-	-	24 h	LC50	120[c]	Hall & Pinkney, 1985
(mature)	-	S	-	-	-	-	24 h	LC50	660[c]	Hall & Pinkney, 1985
(adult)	-	S	-	-	-	-	24 h	LC50	500[d]	Hall & pinkney, 1985
(adult)	-	S	-	-	-	-	24 h	LC50	260[e]	Hall & Pinkney, 1985
(eggs, 5-15 h)	-	S	-	-	-	-	24 h	LC50	22[f]	Hall & Pinkney, 1985
Biomphalaria glabrata	-	S	-	-	5.5	-	24 h	LC50	50[g]	Hall & Pinkney, 1985
Biomphalaria sudanica (4-6 w)	-	S	-	-	7.5-7.8	-	24 h	LC50	17[a]	Hall & Pinkney, 1985
(9-11 w)	-	S	-	-	7.5-7.8	-	24 h	LC50	38[a]	Hall & Pinkney, 1985
Bulinus nasutus (5.5-8 w)	-	S	-	-	7.5-7.8	-	24 h	LC50	12	Verkeer & Waterstaat, 1992
(11-32 w)	-	S	-	-	7.5-7.8	-	24 h	LC50	35[a]	Hall & Pinkney, 1985
pisces										
Rasbora heteromorpha	-	R	-	-	-	20	48 h	LC50	220	Hall & Pinkney, 1985

[b]: 24-h exposure, 24-h recovery (TPTA from 3 suppliers)
[c]: 24-h exposure, 24-h recovery; in methanol (quantity not reported)
[d]: 24-h exposure, 72-h recovery; aqueous suspension
[e]: 24 h exposure, 72-h recovery; in "alcohol" (quantity not reported)
[f]: 24-h exposure, 72-h recovery
[g]: 24-h exposure, 120-h recovery; in Tween 80 (quantity not reported)

APPENDIX IV (continued): Toxicity of azinphos methyl for freshwater species

species	A	Test type	Test sub. purity	Test water	pH	Hardness mg $CaCO_3$/l	Exp. time	Crite-rion	Result µg/l	Reference
chronic toxicity										
Crustacea										
Asellus aquaticus	-	-	-	-	-	-	21 d	NOEC	0.25	van de Meent et al., 1990
Daphnia magna	-	-	-	-	-	-	21 d	NOEC	0.1[a]	van de Meent et al., 1990
Gammarus pseudolimnaeus	-	-	-	-	-	-	30 d	NOEC	0.1	van de Meent et al., 1990
Insecta										
Acroneuria lycorias	-	-	-	-	-	-	30 d	NOEC	1.36	van de Meent et al., 1990
Chaoborus crystallinus	-	-	-	-	-	-	21 d	NOEC	2.0[b]	van de Meent et al., 1990
Cloeon dipterum	-	-	-	-	-	-	21 d	NOEC	2.0[b]	van de Meent et al., 1990
Ephemerella subvaria	-	-	-	-	-	-	30 d	NOEC	2.5	van de Meent et al., 1990
Hydropsyche bettoni	-	-	-	-	-	-	30 d	NOEC	2.94	van de Meent et al., 1990
Ophiogomphus rupinsulensis	-	-	-	-	-	-	30 d	NOEC	1.73	van de Meent et al., 1990
Pisces										
Pimephales promelas	-	-	-	-	-	-	250 d	NOEC	0.33[b]	van de Meent et al., 1990

[a]: mobility
[b]: mortality

APPENDIX IV (continued): Toxicity of methylethylketon for freshwater species

species	A	Test type	Test sub. purity	Test water	pH	Hardness mg $CaCO_3$/l	Exp. time	Crite-rion	Result µg/l	Reference
chronic toxicity										
Protozoa										
Entosiphon sulcatum	n	S	-	am	6.9	35.3	72 h	NOEC	17E+4[a]	Bringmann, 1978
Chilomonas paramaecium	n	S	-	am	6.9	42.3	48 h	NOEC	30E+5[a]	Bringmann et al., 1980
Uronema parduczi	n	S	-	am	6.9	35.3	20 h	NOEC	28E+5[a]	Bringmann & Kühn, 1980b
Bacteria										
Pseudomonas putida	n	S	-	am	7.0	42.5	16 h	NOEC	115E+4[a]	Bringmann & Kühn, 1980a
Cyanophyta										
Microcystis aerigunosa	n	S	-	am	7.0	28.7	8 d	NOEC	12E+4[a]	Bringmann & Kühn, 1976
Chlorophyta										
Scenedesmus quadricauda	n	S	-	am	7.0	28.7	7 d	NOEC	43E+5[a]	Bringmann & Kühn, 1980a

[a]: growth

APPENDIX IV (continued): Toxicity of silver for freshwater species

species	A	test type	test sub. purity	test water	pH	hardness mg $CaCO_3$/l	exp. time	crite-rion	result µg/l	reference
chronic toxicity										
Bacteria										
Pseudomonas putida	N	S	-	am	7.0	42.5	16 h	NOEC	6[d]	Bringmann & Kühn, 1977
Cyanophyta										
Microcystis aeruginosa	N	S	-	am	7.0	28.7	8 d	NOEC	0.7[d]	Bringmann & Kühn, 1978
Chlorophyta										
Scenedesmus quadricauda	N	S	-	am	7.0	28.7	8 d	NOEC	9.5[a]	Bringmann & Kühn, 1978
Protozoa										
Chilomonas paramaecium	N	S	-	am	6.9	42.3	48 h	NOEC	2.6[d]	Bringmann & Kühn, 1980b
Entosiphon sulcatum	N	S	-	am	5.9	35.3	72 h	NOEC	580[d]	Bringmann, 1978
Uronema parduczi	N	S	-	am	6.9	35.3	20 h	NOEC	100[d]	Bringmann & Kühn, 1980a
Crustacea										
Daphnia magna, <24 h	Y	R	tech	nw	7.2	60	21 d	NOEC	1.6[e] α	Nebeker et al., 1983
Daphnia magna, <24 h	Y	R	tech	nw	7.2	75	21 d	NOEC	8.8[e] α	Nebeker et al., 1983
Daphnia magna, <24 h	Y	R	tech	nw	7.2	180	21 d	NOEC	3.4[e] α	Nebeker et al., 1983
Pisces										
Oncorhynchus mykiss, eyed eggs	Y	CF	-	nw	6.8-7.3	30.4	10 w	NOEC	<0.6[b] α	Davies et al., 1978
Oncorhynchus mykiss, eyed eggs	Y	CF	-	nw	6.6-7.4	27.5	18 m	NOEC	0.09[b] α	Davies et al., 1978
Oncorhynchus mykiss, eyed eggs	Y	CF	-	nw	6.6-7.4	27.5	2 m	NOEC	0.09[d] α	Davies et al., 1978
Oncorhynchus mykiss, eyed eggs	Y	CF	-	nw	6.6-7.4	27.5	3 m	NOEC	0.17[d] α	Davies et al., 1978

APPENDIX IV (continued): Toxicity of silver for freshwater species

species	A	test type	test sub. purity	test water	pH	hardness mg $CaCO_3$/l	exp. time	crite-rion	result µg/l	reference
Pisces										
Oncorhynchus mykiss, eyed eggs	Y	CF	-	nw	6.6-7.4	27.5	3.5 m	NOEC	0.34[d] α	Davies et al., 1978
Oncorhynchus mykiss, eggs (sht)	Y	CF	tech	nw	7.0	36	60 d	NOEC	0.36[b] α	Nebeker et al., 1983
Oncorhynchus mykiss, eggs (sht)	Y	CF	tech	nw	7.0	36	60 d	NOEC	0.1[c,d] α	Nebeker et al., 1983
Pimephales promelas, < 24 h	Y	S	99.9%	nw	7.2-7.7	45.1	28 d	NOEC	1.07[a] α	Holcombe et al., 1983
Pimephales promelas, < 24 h	Y	S	99.9%	nw	7.2-7.7	45.1	28 d	NOEC	0.37[b] α	Holcombe et al., 1983
Pimephales promelas, < 24 h	Y	S	99.9%	nw	7.2-7.7	45.1	28 d	NOEC	0.65[c] α	Holcombe et al., 1983
acute toxicity										
Protozoa										
Philodina acuticornis	N	S	-	am	7.4-7.9	25	24 h	EC50	5300[f,g]	Buikema et al., 1974
Nematoda										
Caenorhabditis elegans	-	S	tech	am	-	-	96 h	LC50	100[f]	Williams & Dusenbery, 1990
Annelida										
Tubifex tubifex	N	S	rg	nw	7.6	245	96 h	EC50	31[f,g]	Khangarot, 1991
Crustacea										
Crangonyx pseudogracilis	N	S	-	tw	6.7-6.8	45-55	96 h	LC50	5	Martin & Holdich, 1986
Daphnia magna, 0-24 h	Y	F	-	nw	7.39	44.7	48 h	EC50	0.9[f] α	Holcombe et al., 1987
Daphnia magna	N	S	-	nw	7.6	240	48 h	EC50	10	Khangarot et al., 1987
Daphnia magna, <=24 h	N	S	-	tw	8.0	250	24 h	EC50	4[f]	Bringmann & Kühn, 1982
Daphnia magna, <24 h	Y	S	tech	nw	7.5	38-40	48 h	EC50	0.6-1.1[f,g] α	Nebeker et al., 1983
Daphnia magna, <24 h	Y	S	tech	nw	7.2	33	48 h	EC50	1.1[f,g] α	Nebeker et al., 1983
Daphnia magna, <24 h	Y	S	tech	nw	7.2	33	48 h	EC50	12.5[f,g,j] α	Nebeker et al., 1983

APPENDIX IV (continued): Toxicity of silver for freshwater species

species	A	test type	test sub. purity	test water	pH	hardness mg $CaCO_3$/l	exp. time	crite-rion	result µg/l	reference
Pisces										
Ictalurus punctatus, 14.2 g	Y	F	99.9%	nw	7.2-7.3	44.4	96 h	LC50	17.3[f] α	Holcombe et al., 1983
Lepomis macrochirus, 2.9 g	Y	F	-	nw	7.39	44.7	96 h	LC50	13[f] α	Holcombe et al., 1987
Leuciscus idus melanotus	N	S	-	-	-	-	96 h	LC50	400[f]	Juhnke & Lüdemann, 1978
Oncorhynchus kisutch, alevin	N	S	-	rw	7.1-8.0	41	96 h	LC50	7.05[i]	Buhl & Hamilton, 1991
Oncorhynchus kisutch, juv.	N	S	-	rw	7.1-8.0	41	96 h	LC50	7.94[i]	Buhl & Hamilton, 1991
Oncorhynchus mykiss, 1.2 g	Y	F	-	nw	7.39	44.7	96 h	LC50	6.0[f] α	Holcombe et al., 1987
Oncorhynchus mykiss, alevin	N	S	-	rw	7.1-8.0	41	96 h	LC50	10.22[i]	Buhl & Hamilton, 1991
Oncorhynchus mykiss, juv.	N	S	-	rw	7.1-8.0	41	96 h	LC50	12.2[i]	Buhl & Hamilton, 1991
Oncorhynchys mykiss, 69 mm	Y	F	-	nw	6.7-6.9	31	96 h	LC50	5.3[f]	Davies et al., 1978
Oncorhynchus mykiss, 146 mm	Y	F	-	nw	6.6	20	96 h	LC50	6.2[f]	Davies et al., 1978
Oncorhynchus mykiss, 173 mm	Y	F	-	nw	6.7-6.8	26	96 h	LC50	8.1[f]	Davies et al., 1978
Oncorhynchus mykiss, 167 mm	Y	F	-	nw	8.0	350	96 h	LC50	13.0[f]	Davies et al., 1978
Oncorhynchus mykiss, 78 mm (rbt)	Y	S	tech	nw	-	37-40	96 h	LC50	72.9-84.4[f,k]α	Nebeker et al., 1983
Oncorhynchus mykiss, 28-44 mm (rbt)	Y	S	tech	nw	-	26-35	96 h	LC50	8.5-10.9[f] α	Nebeker et al., 1983
Oncorhynchus mykiss, 28-34 mm (rbt)	Y	F	tech	nw	-	29-42	96 h	LC50	8.6-9.7[f] α	Nebeker et al., 1983
Oncorhynchus mykiss, 32 mm (sht)	Y	F	tech	nw	7.0	36	96 h	LC50	9.2[f] α	Nebeker et al., 1983
Oryzias latipes, 8-d fry	N	S	-	tw	6.9	10.5	24 h	LC50	300[h]	Hiraoka et al., 1985
Pimephales promelas, 0.15 g	Y	F	99.9%	nw	7.2-7.3	44.4	96 h	LC50	6.7[f] α	Holcombe et al., 1983
Pimephales promelas, 0.15 g	Y	S	99.9%	nw	7.2-7.3	44.8	96 h	LC50	14.0[f] α	Holcombe et al., 1983
Pimephales promelas, 0.2 g	Y	F	-	nw	7.39	44.7	96 h	LC50	9.0[f] α	Holcombe et al., 1987
Pimephales promelas, 0.1-0.3 g	Y	S	tech	nw	-	38-39	96 h	LC50	9.4-9.7[f] α	Nebeker et al., 1983
Pimephales promelas, 0.1-0.2 g	Y	F	tech	nw	-	36-40	96 h	LC50	5.6-7.4[f] α	Nebeker et al., 1983
Thymallus articus, alevin	N	S	-	rw	7.1-8.0	41	96 h	LC50	4.25[i]	Buhl & Hamilton, 1991
Thymallus articus, juv.	N	S	-	rw	7.1-8.0	41	96 h	LC50	7.05[i]	Buhl & Hamilton, 1991

APPENDIX IV (continued): Toxicity of silver for freshwater species

species	A	test type	test sub. purity	test water	pH	hardness mg $CaCO_3$/l	exp. time	crite-rion	result µg/l		reference
Mollusca											
Aplexa hypnorum, adult	Y	R	99.9%	nw	7.5	44.7	96 h	LC50	241[f]	α	Holcombe et al., 1983
Dreissena polymorpha, adult	N	R	-	nw	-	-	>28 d	LC50	400[f]		Berthet et al., 1992
Insecta											
Chironomus tentans (larvae)	N	S	-	nw	6.3	25	48 h	EC50	10.4[f,g]		Khangarot & Ray, 1989

[a]: abnormality of larvae; $AgNO_3$ was used, result in µg a.i/l
[b]: survival; $AgNO_3$ was used, result in µg Ag/l
[c]: weight; $AgNO_3$ was used, result in µg Ag/l
[d]: growth; $AgNO_3$ was used, result in µg Ag/l
[e]: alive adults, total young and mean number of young/adult/day
[f]: $AgNO_3$ was used, result expressed in µg Ag/l
[g]: immobilization
[h]: spearabbs.
[i]: $AgNO_3$ was used, value corrected for µg Ag/l
[j]: animals were fed during the test
[k]: 66 g fish in 20 l water
rbt: rainbow trout
sht: steelhead trout

APPENDIX IV (continued): Toxicity of dodecylbenzene for freshwater species

species	A	test type	test sub. purity	test water	pH	hardness mg $CaCO_3$/l	exp. time	crite-rion	result mg/l	reference
chronic toxicity										
crustacea										
Daphnia magna, <24 h										
(alkylate 215)	Y	CF	-	-	-	-	21 d	NOEC	0.0075-0.015[a]	Gledhill et al., 1991
(alkylate 230)	Y	CF	-	-	-	-	21 d	NOEC	0.013- 0.023[a]	Gledhill et al., 1991
acute toxicity										
Pisces										
Leuciscus idus melanotus	N	S	-	-	-	-	96 h	LC50	796	Juhnke & Lüdemann, 1982

[a]: reproduction and growth

APPENDIX IV (continued): Toxicity of 1,2,4-trimethylbenzene for freshwater species

species	A	test type	test sub. purity	test water	pH	hardness mg $CaCO_3$/l	exp. time	crite-rion	result mg/l	reference
chronic toxicity										
Protozoa										
Colpidium colpoda	N	S	98%	am	-	-	18 h	NOEC	1.4[c]	Rogerson *et al.*, 1983
Tetrahymena elliotti	N	S	98%	am	-	-	24 h	NOEC	12[c]	Rogerson *et al.*, 1983
acute toxicity										
Crustacea										
Daphnia magna, 4-6 d, 1.55 mm	N	S	97%	am	6.0-7.0	-	48 h	EC50	3.6[a]	Bobra *et al.*, 1983
Pisces										
Pimephales promelas, 34 d	N	CF	99%	am	7.2	45	96 h	LC50	7.7	Geiger *et al.*, 1988
Pimephales promelas, 30-35 d	N	CF	-	nw	-	46	96 h	LC50	4.2[b]	Hall & Maynard, 1989

[a]: immobility; EC50 derived from graphical extrapolation; same data as Abernethy *et al.*, 1986; pH adjusted before the start of the test, during testing the pH increased, the criteria was that if the pH increased more than 1.5 pH unit the test would not be valid
[b]: data derived from QSAR study
[c]: NOEC=Tox. Threshold (TGK)

APPENDIX IV (continued): Toxicity of 1,3,5-trimethylbenzene for freshwater species

species	A	test type	test sub. purity	test water	pH	hardness mg $CaCO_3$/l	exp. time	crite-rion	result mg/l		reference
chronic toxicity											
Chlorophyta											
Scenedesmus subspicatus	Y	S	-	am	8.0	58	48 h	NOEC	8.1[a]	α	Kuhn & Pattard, 1990
Scenedesmus subspicatus	Y	S	-	am	8.0	58	48 h	NOEC	16[a]	α	Kuhn & Pattard, 1990
Crustacea											
Daphnia magna, 24 h	Y	R	-	am	8.0	238	21 d	NOEC	0.89[c]	α	Kuhn *et al.*, 1989
B. acute toxicity											
Crustacea											
Daphnia magna, 4-6 d, 1.55 mm	N	S	97%	am	6.0-7.0	-	48 h	EC50	6.0[b]		Bobra *et al.*, 1983
Pisces											
Carassius auratus	Y	CF	99%	dtw	7.0	80	96 h	LC50	13	α	Brenniman *et al.*, 1976

[a]: both NOEC's obtained from the same test, the first (8.1 mg/l) is given as a ratio (μ), the second (16 mg/l) is the average biomass inhibition; NOEC=EC10, derived from graphical extrapolation

[b]: immobility; EC50 derived from graphical extrapolation; same data as Abernethy *et al.*, 1986; pH adjusted before the start of the test, during testing the pH increased, the criteria was that if the pH increased more than 1.5 pH unit the test would not be valid

[c]: reproduction; NOEC as geometrical average between nominal conc. (2.0 mg/l) and minimum measured conc. (0.4 mg/l); no data at which time the minimum conc. was measured

APPENDIX IV (continued): Toxicity of 1,2,4,5-tetramethylbenzene for freshwater species

species	A	test type	test sub. purity	test water	pH	hardness mg $CaCO_3$/l	exp. time	crite-rion	result mg/l	reference
chronic toxicity										
Bacteria										
Pseudomonas putida	N	S	-	am	-	85	16 h	NOEC	>5.0	Bringmann & Kühn, 1976
Chlorophyta										
Scenedesmus aeruginosa	N	S	-	am	-	-	8 d	NOEC	>5.0	Bringmann & Kühn, 1978
Scenedesmus quadricauda	N	S	-	am	-	85	8 d	NOEC	>5.0	Bringmann & Kühn, 1976
Cyanophyta										
Microcystis aeruginosa	N	S	-	am	-	-	8 d	NOEC	3.4	Bringmann & Kühn, 1978
acute toxicity										
Chlorophyta										
Chlamydomonas angulosa	N	S	-	am	6.5	-	3 h	EC50	9.7[a]	Hutchinson *et al.*,1980
Chlorella vulgaris	N	S	-	am	6.5	-	3 h	EC50	9.9[a]	Hutchinson *et al.*,1980
Crustacea										
Daphnia magna, 4-6 d, 1.55 mm	N	S	97%	am	6.0-7.0	-	48 h	LC50	0.47[b]	Bobra *et al.*, 1983
Daphnia magna, 24 h	Y	S	-	tw	8.0	272	24 h	LC50	>5	Bringmann & Kuhn, 1982
Daphnia magna, 24 h	Y	S	-	tw	7.7	272	24 h	LC50	>5	Bringmann & Kuhn, 1977

[a]: fotosynthesis measured as $^{14}CO_2$ uptake; EC50 represents the conc. at which the fotosynthesis is inhibited 50%; initial cell density was $5x10^4$ cells for *Chlamydomonas* and $20x10^4$ cells for *Chlorella*; EC50 derived from axtrapolation

[b]: immobility; EC50 derived from graphical extrapolation; same data as Abernethy *et al.*, 1986; pH adjusted before the start of the test, during testing the pH increased, the criteria was that if the pH increased more than 1.5 pH unit the test would not be valid

APPENDIX IV (continued): Toxicity of 1,1-dichloroethane for freshwater species

species	A	test type	test sub. purity	test water	pH	hardness mg $CaCO_3$/l	exp. time	crite-rion	result mg/l	reference
acute toxicity										
Crustacea										
Daphnia magna, <2 d	Y	S	-	DSW	8-8.4	100	48 h	EC50	92[a]	Hermens et al., 1984

[a]: immobility; measured conc at least 70% of nominal, which is given

APPENDIX IV (continued): Toxicity of 1,1,1-trichloroethane for freshwater species

species	A	test type	test sub. purity	test water	pH	hardness mg $CaCO_3$/l	exp. time	crite-rion	result mg/l		reference
chronic toxicity											
Bacteria											
Pseudomonas putida	N	S	-	am	7	76.5	16 h	NOEC	47[a]		Bringmann & Kühn, 1980a
Cyanophyta											
Microcystis aeruginosa	N	S	-	am	7	59.5	8 d	NOEC	180[a]		Bringmann & Kühn, 1978
Chlorophyta											
Scenedesmus quadricauda	N	S	-	am	7	59.5	8 d	NOEC	220[a]		Bringmann & Kühn, 1978
Crustacea											
Daphnia magna, ≤24 h	Y	R	96%	am	7.6-8.8	187	17 d	NOEC	1.3[b]	α	Thompson et al., 1989
Daphnia magna, ≤24 h	Y	R	-	am	-	200	21 d	NOEC	7.9[c]	α	De Wolf et al., 1986
Pisces											
Cyprinus carpio, 0.79 g	Y	CF	96%	-	7.6-8.1	64-74	14 d	NOEC	7.7[d]	α	Thompson et al.,1989
acute toxicity											
Chlorophyta											
Chlamydomonas angulosa	N	S	-	am	6.5	-	3 h	EC50	280[e]		Hutchinson et al., 1980
Chlorella vulgaris	N	S	-	am	6.5	-	3 h	EC50	150[e]		Hutchinson et al., 1980
Bacteria											
Spirochaeta aurantia	N	S	-	am	7	-	30 min	EC50	410[g]		Pill et al., 1991

APPENDIX IV (continued): Toxicity of 1,1,1-trichloroethane for freshwater species

species	A	test type	test sub. purity	test water	pH	hardness mg $CaCO_3$/l	exp. time	crite-rion	result mg/l		reference
Crustaceans											
Daphnia magna, 4-6 d	N	S	≥97%	rdw	6-7	-	48 h	EC50	58[h]		Abernethy et al., 1986
Daphnia magna, <24 h	N	S	-	am	7.8-8.2	-	24 h	EC50	2400[i]		Bringmann & Kühn, 1982
Daphnia magna, <2 d	Y	S	-	DSW	8-8.4	100	48 h	EC50	38[j]		Hermens et al., 1984
Pisces											
Lepomis macrochirus, 0.32-1.2g	N	S	≥80%	nw	6.7-7.8	32-48	96 h	LC50	72		Buccafusco et al., 1981
Pimephales promelas, 31 d	Y	CF	99%	nw	7.7-8.0	43.8-46.4	96 h	LC50	48[k]	α	Brooke et al., 1985
Pimephales promelas, adult	Y	CF	-	nw	7.8-8.0	68	96 h	LC50	53	α	Alexander et al., 1978
Pimephales promelas, 0.139 g	Y	CF	99%	nw	7.69	43.8	96 h	LC50	53		Geiger et al., 1986
Pimephales promelas, 0.060 g	Y	CF	99%	nw	7.99	46.4	96 h	LC50	42		Geiger et al., 1986

[a]: growth; NOEC calculated as TGK/2; 1,1,1- or 1,1,2- not recorded
[b]: both reproduction and mortality; renewal every 2 days; conc is mean of measured new (at renewal) and old (just before renewal) values
[c]: growth; measured conc 56% of nominal, NOEC is mean of measured and nominal conc; renewal three times a week
[d]: weight
[e]: $^{14}CO_2$ uptake
[f]: inhibition of bioluminescence
[g]: growth
[h]: immobility
[i]: immobility; unknown if 1,1,1-TCA or 1,1,2-TCA was tested
[j]: average of 2 tests: 52.9 and 42.3
[k]: immobility; measured conc at least 70% of nominal, which is given

APPENDIX IV (continued): Toxicity of 1,2-dichloroethene for freshwater species

species	A	test type	test sub. purity	test water	pH	hardness mg $CaCO_3$/l	exp. time	crite-rion	result mg/l	reference
acute toxicity										
Crustacea										
Daphnia magna, ≤24 h	N	S	≥80%	nw	7.4-9.4	160-186	48 h	LC50	220[a]	LeBlanc, 1980
Pisces										
Lepomis macrochirus, 0.32-1.2g	N	S	≥80%	nw	6.7-7.8	32-48	96 h	LC50	140	Buccafusco et al., 1981

[a]: not clear if testvessels were closed

APPENDIX IV (continued): Toxicity of ethyleneglycol for freshwater species

species	A	test type	test sub. purity	test water	pH	hardness mg $CaCO_3$/l	exp. time	crite-rion	result mg/l	reference
chronic toxicity										
Cyanophyta										
Microcystis aeruginosa	N	S	-	am	7.0	28.7	8 d	NOEC	2000[a]	Bringmann & Kühn, 1978
Protozoa										
Chilomonas paramaecium	N	S	-	am	6.9	42.3	48 h	NOEC	112[a]	Bringmann & Kühn, 1980b
Uronema parduczi	N	S	-	am	6.9	35.3	20 h	NOEC	>10000[a]	Bringmann & Kühn, 1980a
acute toxicity										
Crustacea										
Daphnia magna, <=24 h	N	S	-	tw	8.0	250	24 h	EC50	>10000	Bringmann & Kühn, 1982
Daphnia magna, neonates	N	S	rg	nw	8.0	157	48 h	LC50	46300	Gersich et al., 1986
Pisces										
Leuciscus idus melanotus	N	S	-	-	-	-	96 h	LC50	>10000	Juhnke & Lüdemann, 1978
Oncorhynchus mykiss, 0.7 g	N	S	100%	-	7.4	44	96 h	LC50	46	Mayer & Ellersieck, 1986
Oncorhynchus mykiss, 1.1 g	N	S	100%	-	7.4	44	96 h	LC50	18	Mayer & Ellersieck, 1986
Pimephales promelas, fry 10-15 d	N	S	tech	nw	7.6-8.3	96-125	96 h	LC50	53000	Mayes et al., 1983
Pimephales promelas, juv. 30 d	N	S	tech	nw	7.6-8.3	96-125	96 h	LC50	49000	Mayes et al., 1983
Pimephales promelas, 60-100 d	N	S	tech	nw	7.6-8.3	96-125	96 h	LC50	57000	Mayes et al., 1983

[a]: growth

APPENDIX IV (continued): Toxicity of diethyleneglycol for freshwater species

species	A	test type	test sub. purity	test water	pH	hardness mg $CaCO_3$/l	exp. time	crite-rion	result mg/l	reference
chronic toxicity										
Bacteria										
Pseudomonas putida	N	S	-	am	7.0	42.5	16 h	NOEC	8000[a]	Bringmann & Kühn, 1977
Cyanophyta										
Microcystis aeruginosa	N	S	-	am	7.0	28.7	8 d	NOEC	1700[a]	Bringmann & Kühn, 1978
Chlorophyta										
Scenedesmus quadricauda	N	S	-	am	7.0	28.7	8 d	NOEC	2700[a]	Bringmann & Kühn, 1978
Protozoa										
Entosiphon sulcatum	N	S	-	am	5.9	35.3	72 h	NOEC	10800[a]	Bringmann, 1978
Uronema parduczi	N	S	-	am	6.9	35.3	20 h	NOEC	>8000[a]	Bringmann & Kühn, 1980a
B. acute toxicity										
Crustacea										
Daphnia magna, <=24 h	N	S	-	tw	8.0	250	24 h	EC50	>10000	Bringmann & Kühn, 1982
Pisces										
Leuciscus idus melanotus	N	S	-	-	-	-	96 h	LC50	> 10000	Juhnke & Lüdemann, 1978

[a]: growth

APPENDIX IV (continued): Toxicity of acrylonitril for freshwater species

species	A	test type	test sub. purity	test water	pH	hardness mg $CaCO_3$/l	exp. time	crite-rion	result mg/l	reference
acute toxicity										
Crustacea										
Daphnia magna, < 24 h	N	S	≥80%	nw	7.4-9.4	160-186	48 h	EC50	7.6[a]	LeBlanc, 1980
	N	S	-	nw	7-8.2	90-180	48 h	EC50	11[a]	Randall & Knopp, 1980
fish										
Brachydanio rerio	N	S	>99%	-	7.2-7.8	-	96 h	LC50	25	Wellens, 1982
Lepomis macrochirus, 0.9 g, 3.7 cm	N	S	-	tw	-	31	96 h	LC50	24	Bailey et al., 1985
Lepomis macrochirus, 0.9 g, 3.7 cm	Y	CF	-	tw	-	31	96 h	LC50	9.3	Bailey et al., 1985
Lepomis macrochirus, 0.32-1.2 g	N	S	≥80%	nw	6.7-7.8	32-48	96 h	LC50	10	Buccafusco et al., 1981
Lepomis macrochirus, 2 g, 4.5 cm	N	S	-	-	7.4	20	96 h	LC50	12	Henderson et al., 1961
Pimephales promelas, 1.5 g, 6.5 cm	N	S	-	-	8.2	380	96 h	LC50	14	Henderson et al., 1961
Pimephales promelas, 1.5 g, 6.5 cm	N	S	-	-	7.4	20	96 h	LC50	18	Henderson et al., 1961
Pimephales promelas, 1.5 g, 6.5 cm	N	CF	-	-	7.4	20	96 h	LC50	10	Henderson et al., 1961
Poecilia reticulata, 0.1 g. 2.5 cm	N	S	-	-	7.4	20	96 h	LC50	34	Henderson et al., 1961

[a]: immobility

APPENDIX IV (continued): Toxicity of formaldehyde for freshwater species

species	A	test type	test sub. purity	test water	pH	hardness mg $CaCO_3$/l	exp. time	crite-rion	result mg/l	reference
chronic toxicity										
Bacteria										
Pseudomonas putida	N	S	35%	am	7.0	42.5	16 h	NOEC	5[a]	Bringmann & Kühn, 1977
Cyanophyta										
Microcystis aeruginosa	N	S	35%	am	7.0	28.7	8 d	NOEC	0.14[a]	Bringmann & Kühn, 1978
Chlorophyta										
Scenedesmus quadricauda	N	S	35%	am	7.0	28.7	8 d	NOEC	0.88[a]	Bringmann & Kühn, 1978
Protozoa										
Chilomonas paramaecium	N	S	35%	am	6.9	42.3	48 h	NOEC	1.58[a]	Bringmann & Kühn, 1980b
Entosiphon sulcatum	N	S	35%	am	5.9	35.3	72 h	NOEC	7.7[a]	Bringmann, 1978
Uronema parduczi	N	S	35%	am	6.9	35.3	20 h	NOEC	2.28[a]	Bringmann & Kühn, 1980a
acute toxicity										
Crustacea										
Cypridopsis sp.	N	S	37%	rw	6.5	20	96 h	EC50	9.2[d]	Bills et al., 1977
Daphnia magna, <=24 h	N	S	35%	am	8.0	250	24 h	EC50	15[c]	Bringmann & Kühn, 1982
Palaemonetes kadiakensis	N	S	37%	rw	6.5	20	96 h	EC50	186[d]	Bills et al., 1977
Mollusca										
Corbicula sp.	N	S	37%	rw	6.5	20	96 h	EC50	5[e]	Bills et al., 1977
Helisoma sp.	N	S	37%	rw	6.5	20	96 h	EC50	37[f]	Bills et al., 1977

APPENDIX IV (continued): Toxicity of formaldehyde for freshwater species

species	A	test type	test sub. purity	test water	pH	hardness mg $CaCO_3$/l	exp. time	crite-rion	result mg/l	reference
Insecta										
Notonecta sp.	N	S	37%	rw	6.5	20	96 h	EC50	330[f]	Bills et al., 1977
Bacteria										
Photobacterium phosphoreum	N	S	-	-	-	-	5 min	EC50	3	Bulich et al., 1981
Pisces										
Ictalurus melas, 0.75 g	N	CF	37%	rw	7.5	20	96 h	LC50	25	Bills et al., 1977
Ictalurus punctatus, 0.40 g	N	CF	37%	rw	7.5	20	96 h	LC50	26	Bills et al., 1977
Ictalurus punctatus, 0.40 g	N	CF	37%	rw	9.5	20	96 h	LC50	17	Bills et al., 1977
Lepomis cyanellus, 0.70 g	N	CF	37%	rw	7.5	20	96 h	LC50	69	Bills et al., 1977
Lepomis macrochirus, 0.50 g	N	CF	37%	rw	7.5	20	96 h	LC50	39	Bills et al., 1977
Lepomis macrochirus, 0.50 g	N	CF	37%	rw	8.5	20	96 h	LC50	34	Bills et al., 1977
Leuciscus idus melanotus	N	S	30%	-	-	-	48 h	LC50	15[c]	Juhnke & Lüdemann, 1978
Micropterus dolomieui, 0.68 g	N	CF	37%	rw	7.5	20	96 h	LC50	54	Bills et al., 1977
Micropterus salmoides, 1 g	N	CF	37%	rw	7.5	20	96 h	LC50	57	Bills et al., 1977
Oncorhynchus mykiss, 0.63	N	CF	37%	rw	7.5	20	96 h	LC50	47	Bills et al., 1977
Oncorhynchus mykiss, 0.63	N	CF	37%	rw	9.5	20	96 h	LC50	39	Bills et al., 1977
Oncorhynchus salar, 0.60 g	N	CF	37%	rw	7.5	20	96 h	LC50	69	Bills et al., 1977
Salvelinus namaycush, 0.50 g	N	CF	37%	rw	7.5	20	96 h	LC50	39	Bills et al., 1977
Poecilia reticulata, 2-3 m	-	R	-	am	6.5-7.5	20	14 d	LC50	27[b]	Deneer et al., 1988

[a]: growth, value corrected for 100% a.i
[b]: value corrected for loss of compound during the 24-h period between renewal of the solutions.
[c]: value corrected for 100% a.i
[d]: immobility
[e]: ability toresist attempts to open valves and respond to tactile stimulus,
[f]: ability to respond to tactile stimulus

APPENDIX IV (continued): Toxicity of methanol for freshwater species

species	A	test type	test sub. purity	test water	pH	hardness mg $CaCO_3$/l	exp. time	crite-rion	result mg/l	reference
chronic toxicity										
Bacteria										
Pseudomonas putida	N	S	-	am	7.0	42.5	16 h	NOEC	6600[a]	Bringmann & Kühn, 1977
Cyanophyta										
Anabaena sp.	N	S	-	am	-	-	10-14 d	EC50	25	Stratton, 1987
Anabaena cylindrica	N	S	-	am	-	-	10-14 d	EC50	20	Stratton, 1987
Anabaena inaequalis	N	S	-	am	-	-	10-14 d	EC50	21	Stratton, 1987
Anabaena variabilis	N	S	-	am	-	-	10-14 d	EC50	25	Stratton, 1987
Microcystis aeruginosa	N	S	-	am	7.0	28.7	8 d	NOEC	530[a]	Bringmann & Kühn, 1978
Nostoc sp.	N	S	-	am	-	-	10-14 d	EC50	43	Stratton, 1987
Chlorophyta										
Scenedesmus quadricauda	N	S	-	am	7.0	28.7	8 d	NOEC	8000[a]	Bringmann & Kühn, 1978
Chlorella pyrenoidosa	N	S	-	am	-	-	10-14 d	EC50	29[a]	Stratton & Smith, 1988
Protozoa										
Chilomonas paramaecium	N	S	-	am	6.9	42.3	48 h	NOEC	441[a]	Bringmann & Kühn, 1980b
Uronema parduczi	N	S	-	am	6.9	35.3	20 h	NOEC	>10000[a]	Bringmann & Kühn, 1980a

APPENDIX IV (continued): Toxicity of methanol for freshwater species

species	A	test type	test sub. purity	test water	pH	hardness mg $CaCO_3$/l	exp. time	crite-rion	result mg/l	reference
acute toxicity										
Protozoa										
Paramecium caudatum	N	S	-	am	-	-	4 h	LC50	7700	Rajini et al., 1989
Crustacea										
Daphnia magna, <=24 h	N	S	-	tw	8.0	250	24 h	EC50	>10000	Bringmann & Kühn, 1982
Daphnia magna	N	S	-	-	-	-	48 h	EC50[a]	13200	Vaishnav & Korthals, 1990
Pisces										
Lepomis macrochirus	N	CF	-	nw	7.04-7.97	46.6	96 h	LC50	19100	Poirier et al., 1986
Leuciscus idus melanotus	N	S	-	-	-	-	96 h	LC50	>10000	Juhnke & Lüdemann, 1978
Oncorhynchus mykiss	N	CF	-	nw	7.04-7.97	46.6	96 h	LC50	20100	Poirier et al., 1986
Oncorhynchus mykiss, 0.8 g	N	S	tech	-	7.4	44	96 h	LC50	15	Mayer & Ellersieck, 1986
Pimephales promelas	N	CF	-	nw	7.04-7.97	46.6	96 h	LC50	29700	Poirier et al., 1986
Pimephales promelas, 30 d	Y	CF	-	nw	7.5	45.5	96 h	LC50	28100	Veith et al., 1983

[a]: growth

APPENDIX IV (continued): Toxicity of butanol for freshwater species

species	A	test type	test sub. purity	test water	pH	hardness mg $CaCO_3$/l	exp. time	crite-rion	result mg/l	reference
chronic toxicity										
Bacteria										
Pseudomonas putida	N	S	-	am	7.0	42.5	16 h	NOEC	650[a]	Bringmann & Kühn, 1977
Cyanophyta										
Microcystis aeruginosa	N	S	-	am	7.0	28.7	8 d	NOEC	100[a]	Bringmann & Kühn, 1978
Chlorophyta										
Scenedesmus quadricauda	N	S	-	am	7.0	28.7	8 d	NOEC	95[a]	Bringmann & Kühn, 1978
Protozoa										
Chilomonas paramaecium	N	S	-	am	6.9	42.3	48 h	NOEC	28[a]	Bringmann & Kühn, 1980b
Entosiphon sulcatum	N	S	-	am	6.9	35.3	72 h	NOEC	55[a]	Bringmann, 1978
Uronema parduczi	N	S	-	am	6.9	35.3	20 h	NOEC	8[a]	Bringmann & Kühn, 1980a
acute toxicity										
Amphibia										
Xenopus laevis, 3-4 w	N	S	ag	DSW	8.0	200	48 h	LC50	1200	de Zwart & Slooff, 1987
Crustacea										
Daphnia magna, <=24 h	N	S	-	tw	8.0	250	24 h	EC50	1880	Bringmann & Kühn, 1982
Pisces										
Carassius auratus, 3.3 g	N	S	-	tw	7.8	280	24 h	LC50	1900	Bridié et al., 1979
Leuciscus idus melanotus	N	S	-	-	-	-	48 h	LC50	1200	Vaishnav & Korthals, 1990
Pimephales promelas, 30 d	Y	CF	-	nw	7.5	45.5	96 h	LC50	1730	Veith et al., 1983

[a]: growth

APPENDIX IV (continued): Toxicity of butylacetate for freshwater species

species	A	test type	test sub. purity	test water	pH	hardness mg $CaCO_3$/l	exp. time	crite-rion	result mg/l	reference
chronic toxicity										
Bacteria										
Pseudomonas putida	N	S	-	am	7.0	42.5	16 h	NOEC	115[a]	Bringmann & Kühn, 1977
Cyanophyta										
Microcystis aeruginosa	N	S	-	am	7.0	28.7	8 d	NOEC	280[a]	Bringmann & Kühn, 1978
Chlorophyta										
Scenedesmus quadricauda	N	S	-	am	7.0	28.7	8 d	NOEC	21[a]	Bringmann & Kühn, 1978
Protozoa										
Chilomonas paramaecium	N	S	-	am	6.9	42.3	48 h	NOEC	670[a]	Bringmann & Kühn, 1980b
Entosiphon sulcatum	N	S	-	am	5.9	35.3	72 h	NOEC	321[a]	Bringmann, 1978
Uronema parduczi	N	S	-	am	6.9	35.3	20 h	NOEC	574[a]	Bringmann & Kühn, 1980a
acute toxicity										
Crustacea										
Daphnia magna, <=24 h	N	S	-	tw	8.0	250	24 h	EC50	205	Bringmann & Kühn, 1982
Pisces										
Lepomis macrochirus, 33-75 mm	N	S	pure	nw	7.6-7.9	55	96 h	LC50	100	Dawson et al., 1975/77
Leuciscus idus melanotus	N	S	-	-	-	-	96 h	LC50	71	Juhnke & Lüdemann, 1978
Pimephales promelas, 31-32 d	N	S	>=99%	-	7.2	43	96 h	LC50	18	Brooke et al., 1984

[a]: growth

APPENDIX IV (continued): Toxicity of methyl *tert*-butyl ether for freshwater species

species	A	test type	test sub. purity	test water	pH	hardness mg $CaCO_3$/l	exp. time	crite-rion	result mg/l	reference
acute toxicity										
Pisces										
Pimephales promelas, 30 d	Y	CF	-	nw	7.5	45.5	96 h	LC50	706	Veith et al., 1983
Pimephales promelas, 0.193 g	Y	CF	97%	nw	7.5	47.7	96 h	LC50	672	Geiger et al., 1988

APPENDIX V: toxicity data marine species

In this appendix the toxicity data for marine species are presented. For each substance the data are divided in chronic toxicity data and acute toxicity data.

Legend:

A	Y= test substance analyzed in test solution N= test substance not analyzed in solution or no data
test type	S= static, R= renewal, CF= continuous flow
test sub. purity	ag= analytical grade, rg= reagent grade, tech= technical grade
test water	am= artificial medium, DSW:=Dutch Standard Water, dtw:= dechlorinated tap water, nw= natural water, rw= reconstituted water, rdw= reconstituted deionized sterile-filtered water, sw= standard water, tw= tap water
exp. time	exposure time: h= hour(s), d= day(s), w= week(s), m= month(s), min= minute(s)
result > and ≥	value indicated is highest concentration used in the test
< and ≤	value indicated is lowest concentration used in the test
α	given value based on measured concentrations

Content:

APPENDIX V: toxicity of data antimony for marine species

species	A	test type	test sub. purity	test water	pH	salinity in ‰	exp. time	crite-rion	result µg/l	reference
acute toxicity										
Pisces										
Cyprinodon variegatus, 14-28 d	n	-	-	nw	-	10-31	96 h	LC50	>6200<8300	v.d. Plassche et al., 1992

[a]: growth
[b]: immobilization

APPENDIX V: toxicity of data boron for marine species

species	A	test type	test sub. purity	test water	pH	salinity in ‰	exp. time	crite-rion	result µg/l	reference
chronic toxicity										
Algae										
Marine phytoplankton (19 spec.)H_3BO_3	n	S	anal.	am	7.6-8.0	33[e]	40 d	NOEC	10000[a]	Antia & Cheng, 1975

APPENDIX V (continued): toxicity of data tributltin oxide for marine species

species	A	test type	test sub. purity	test water	pH	salinity in ‰	exp. time	crite-rion	result µg/l	reference
chronic toxicity										
Mollusca										
Crassostrea gigas	-	S	-	nw	-	35	28 d	NOEC	< 0.005[a,d]	Nell & Chvojka, 1992
Mytilus edulis (5 m)	-	F	-	nw	-	33.7	7 d	NOEC	0.1[a]	Stromgren & Bongard, 1987
Saccostrea commercialis	-	S	-	nw	-	35	28 d	NOEC	< 0.005[a,e]	Nell & Chvojka, 1992
Pisces										
Gasterosteus aculeatus (45-60 mm)	Y	F	-	nw	-	15-35	225 d	NOEC	0.1[c]	Holm et al., 1991

[a]: growth
[b]: reproduction
[c]: mortality
[d]: 58% reduction in growth
[e]: 79% reduction in growth

APPENDIX V (continued): toxicity of data acrylonitril for marine species

species	A	test type	test sub. purity	test water	pH	salinity in ‰	exp. time	crite-rion	result mg/l	reference
acute toxicity										
Annelida										
Ophryotrocha diadema	N	S	-	nw	-	32	48 h	LC50	67.5[a]; 2[b]	van de Plassche et al., 1993
Pisces										
Lagodon rhomboides, 57-113 mm	N	S	-	nw	-	-	24 h	LC50	24.5[a]; 5[c]	van de Plassche et al., 1993

[a]: result from reference
[b]: recalculation: concentration after 24 h, presumed t½ = 5 h
[c]: recalculation: concentration after 12 h, presumed t½ = 5 h

APPENDIX V (continued): toxicity of data n-butanol for marine species

species	A	test type	test sub. purity	test water	pH	salinity in ‰	exp. time	crite-rion	result mg/l	reference
acute toxicity										
Bacteria										
Mixed microbial culture	N	S	-	am	-	-	75 m	EC50	10700[a]	Vaishnav & Korthals, 1990
Photobacterium phosphoreum	N	S	-	-	-	-	15 m	EC50	2800	Hermens et al., 1985
	N	S	-	-	-	-	5 m	EC50	3300	Bulich et al., 1981
Crustacea										
Elminius modestus	N	S	-	-	-	-	15 m	EC50	2.8	Vaishnav & Korthals, 1990
Nitroca spinipes	N	S	tech	nw	7.6	7	96 h	LC50	2100	Bengtsson et al., 1984
Pisces										
Alburnus alburnus	N	S	tech	nw	7.6	7	96 h	LC50	2290	Vaishnav & Korthals, 1990

[a]: inhibition of biodegradation

APPENDIX V (continued): toxicity of data butylacetate for marine species

species	A	test type	test sub. purity	test water	pH	salinity in ‰	exp. time	crite-rion	result mg/l	reference
acute toxicity										
Pisces										
Menidia beryllina, 40-100 mm	N	S	pure	nw	7.6-7.9	-	96 h	LC50	185	Dawson et al., 1975/77

APPENDIX V (continued): toxicity of data 1,1,1-trichloroethane for marine species

species	A	test type	test sub. purity	test water	pH	salinity in °/oo	exp. time	crite-rion	result mg/l	reference
A. chronic toxicity										
No data available										
B. acute toxicity										
Bacteria										
Photobacterium phosphoreum	N	S	>99%	rdw	6.3-7.8	0	15 min	EC50	8[f]	Hermens et al., 1985
Pisces										
Cyprinodon variegatus, 14-28 d	N	S	>=80%	nw	-	10-31	96 h	LC50	71[a]; 0.1[b]	Heitmuller et al., 1981

[a]: result from reference
[b]: recalculation: concentration after 48 h, presumed t½ = 5 h

APPENDIX V (continued): toxicity data of diethyleneglycol for marine species

species	A	test type	test sub. purity	test water	pH	salinity in °/oo	exp. time	crite-rion	result mg/l	reference
acute toxicity										
Bacteria										
Photobacterium phosphoreum	N	S	-	-	-	-	15 min	EC50	29000	Hermens et al., 1985

APPENDIX V (continued): toxicity data of mono-ethyleneglycol for marine species

species	A	test type	test sub. purity	test water	pH	salinity in ‰	exp. time	crite-rion	result mg/l	reference
acute toxicity										
Pisces										
Sciaenops ocellatus, morula 1.5-2 h	N	S	-	am	-	30-32	20 min	EC75	15.5[a,b]	Robertson et al., 1988
Sciaenops ocellatus, morula 1.5-2 h	N	S	-	am	-	30-32	20 min	EC85	31[a,b]	Robertson et al., 1988
Sciaenops ocellatus, morula 1.5-2 h	N	S	-	am	-	30-32	20 min	EC97.5	124[a,b]	Robertson et al., 1988
Sciaenops ocellatus, morula 1.5-2 h	N	S	-	am	-	30-32	20 min	EC100	248[a,b]	Robertson et al., 1988
Sciaenops ocellatus, tail bud stage 12-13 h	N	S	-	am	-	30-32	20 min	EC0	62[a]	Robertson et al., 1988
Sciaenops ocellatus, tail bud stage 12-13 h	N	S	-	am	-	30-32	20 min	EC0	124[b]	Robertson et al., 1988
Sciaenops ocellatus, tail bud stage 12-13 h	N	S	-	am	-	30-32	20 min	EC10	124[a]	Robertson et al., 1988
Sciaenops ocellatus, tail bud stage 12-13 h	N	S	-	am	-	30-32	20 min	EC100	248[a,b]	Robertson et al., 1988

[a]: exposure period 20 min, counting of hatched embryos 40 hours after fertilization.
[b]: exposure period 20 min, counting of alive embryos 40 hours after fertilization.

APPENDIX V (continued): toxicity data of mono-ethyleneglycol for marine species

species	A	test type	test sub. purity	test water	pH	salinity in ‰	exp. time	crite-rion	result mg/l	reference
A. chronic toxicity										
No data available										
B. acute toxicity										
Pisces										
Menidia beryllina, 40-100 mm	N	S	pure	nw	7.6-7.9	-	96 h	LC50	18	Dawson et al., 1975/77

APPENDIX V (continued): toxicity data of formaldehyde for marine species

species	A	test type	test sub. purity	test water	pH	salinity in ‰	exp. time	crite-rion	result mg/l	reference
A. chronic toxicity										
No data available										
B. acute toxicity										
Pisces										
Chanos chanos, 6 g	N	S	-	-	8.0	32	96 h	LC50	232	Cruz & Pitogo, 1989
Morone saxatilis, 1.8 g	N	S	37%	nw	8.2	10	96 h	LC50	5.7[a]	Reardon & Harrell, 1990

[a]: value corrected for 100% a.i.

APPENDIX V (continued): toxicity data of methanol for marine species

species	A	test type	test sub. purity	test water	pH	salinity in ‰	exp. time	crite-rion	result mg/l	reference
acute toxicity										
Bacteria										
Mixed microbial culture	N	S	-	am	-	-	75 min	EC50	90300[c]	Vaishnav & Korthals, 1990
Photobacterium phosphoreum	N	S	-	-	-	-	15 min	EC50	42000	Hermens et al., 1985
Photobacterium phosphoreum	N	S	-	-	-	-	5 min	EC50	125000	Curtis et al., 1982
Crustacea										
Elminius modestus	N	S	-	-	-	-	15 min	EC50	0.77	Vaishnav & Korthals, 1990
Nitroca spinipes	N	S	tech	nw	7.9	7	96 h	LC50	12000	Bengtsson et al., 1984
Pisces										
Alburnus alburnus	N	S	tech	nw	7.9	7	96 h	LC50	28000	Bengtsson et al., 1984
Sciaenops ocellatus, morulae 1.5-2 h	N	S	-	am	-	30-32	20 min	EC0	64[a,b]	Robertson et al., 1988
Sciaenops ocellatus, morulae 1.5-2 h	N	S	-	am	-	30-32	20 min	EC62	128[a]	Robertson et al., 1988
Sciaenops ocellatus, morulae 1.5-2 h	N	S	-	am	-	30-32	20 min	EC71	128[b]	Robertson et al., 1988
Sciaenops ocellatus, tail bud stage 12-13 h	N	S	-	am	-	30-32	20 min	EC0	64[a,b]	Robertson et al., 1988
Sciaenops ocellatus, tail bud stage 12-13 h	N	S	-	am	-	30-32	20 min	EC89	128[a,b]	Robertson et al., 1988

[a]: exposure period 20 min, counting of hatched embryos 40 hours after fertilization.
[b]: exposure period 20 min, counting of alive embryos 40 hours after fertilization.
[c]: inhibition of biodegradation

APPENDIX V (continued): toxicity data of silver for marine species

species	A	test type	test sub. purity	test water	pH	salinity in ‰	exp. time	crite-rion	result µg/l	reference
chronic toxicity										
Mollusca										
Mytilus edulis, juvenile	Y	F	-	nw	-	25	6 m	NOEC	25[a]	Calabrese et al., 1984
Chlamys varia, 1.33 g (d.w)	N	R	-	nw	-	35	14 d	EC21	20[b,d]	Metayer et al., 1990
Crassostrea gigas, 10 m	N	R	-	nw	-	35	28 d	NOEC	20[b,c]	Metayer et al., 1990
Mytilus galloprovincialis, 3 y	N	R	-	nw	-	35	28 d	NOEC	20[b,c]	Metayer et al., 1990
B. acute toxicity										
Mollusca										
Chlamys varia, 1.33 g (d.w)	N	R	-	nw	-	35	115 h	LC50	100[b]	Metayer et al., 1990
Chlamys varia, 1.33 g (d.w)	N	R	-	nw	-	35	<24 h	LC50	1000[b]	Metayer et al., 1990
Crassostrea gigas, 10 m	N	R	-	nw	-	35	209 h	LC50	100[b]	Metayer et al., 1990
Crassostrea gigas, 10 m	N	R	-	nw	-	35	108 h	LC50	1000[b]	Metayer et al., 1990
Mytilus galloprovincialis, 3 y	N	R	-	nw	-	35	110 h	LC50	100[b]	Metayer et al., 1990
Mytilus galloprovincialis, 3 y	N	R	-	nw	-	35	79 h	LC50	1000[b]	Metayer et al., 1990
Scrobicularia plana	N	R	-	nw	-	33	250 h	LC50	100[e]	Berthet et al., 1992
Scrobicularia plana	N	R	-	nw	-	33	96 h	LC50	200[e]	Berthet et al., 1992
Scrobicularia plana	N	R	-	nw	-	33	72 h	LC50	1000[e]	Berthet et al., 1992
Pisces										
Cypronodon variegatus, 14-28 d	N	S	>=80%	nw	-	10-31	96 h	LC50	58000	Heitmuller et al., 1981
	N	S	>=80%	nw	-	10-31	96 h	NOEC	6400	Heitmuller et al., 1981

[a]: length and weight; $AgNO_3$ was used, result expressed as ug Ag/l; field-collected mussels
[b]: $AgNO_3$ was used; result expressed in ug Ag/l; salinity of the seawater not reported, normal average value is given
[c]: mortality; exposure via water or via food (algae exposed to 20 ug Ag/l for 4 days)
[d]: mortality; exposure both via water and via food (algae exposed to 20 ug Ag/l for 4 days)
[e]: $AgNO_3$ was used; result expressed in ug Ag/l

APPENDIX V (continued): toxicity data of 1,2,4-trimethylbenzene for marine species

species	A	test type	test sub. purity	test water	pH	salinity in ‰	exp. time	crite-rion	result mg/l	reference
acute toxicity										
Crustacea										
Artemia sp., nauplii larvae	N	S	97%	am	-	-	48 h	LC50	12[a]	Bobra *et al.*, 1983

[a]: LC50 derived from graphical extrapolation; same data as Abernethy *et al.*, 1986

APPENDIX V (continued): toxicity data of 1,3,5-trimethylbenzene for marine species

species	A	test type	test sub. purity	test water	pH	salinity in ‰	exp. time	crite-rion	result mg/l	reference
acute toxicity										
Crustacea										
Artemia sp., nauplii larvae	N	S	97%	am	-	-	48 h	LC50	14[a]	Bobra *et al.*, 1983
Cancer magister, 24 h, larvae	N	CF					96 h	LC50	4.3[b]	Caldwell *et al.*, 1976

[a]: LC50 derived from graphical extrapolation; same data as Abernethy *et al.*, 1986
[b]: information from BUA report 46, 1990

APPENDIX VI: QSAR-data for freshwater and marine species, 1,2,3-trimethylbenzene

log Kow	3.82		
Molecular Weight (g)	120.2		
Species	NOEC [mg/l]	log Kow	range
Bacteria			
Clostridium botulinum	45.45	0.77 - 6.11	
Bacillus subtilus	4.03	-0.77 - 4.57	
Pseudomonas putida	10.84	-0.25 - 2.72	
Photobacterium phosphoreum	9.17	-1.31 - 4.14	
Fungi			
Saccharomonas cerevisiae	56.27	-0.77 - 1.56	
Algae			
Skeletonema costatum	8.12	1.48 - 4.60	
Scenedesmus subspicatus	2.42	0.76 - 3.53	
Selenastrum capricornutum	0.35	2.19 - 4.05	
Protozoa			
Tetrahymena pyriformis	5.55	-0.77 - 5.58	
Coelenterata			
Hydra oligactis	0.56	-0.25 - 2.72	
Mollusca			
Lymnea stagnalis	0.52	-0.25 - 2.72	
Arthropoda			
Nitocra spinipes	0.91	-0.77 - 5.13	
Daphnia magna	0.26	-0.24 - 5.18	
Aedes aegypti	0.36	-1.36 - 2.72	
Culex pipiens	0.65	-0.25 - 2.72	
Pisces			
Pimephales promelas/ Brachydanio rerio	0.25	0.46 - 5.24	
Amphibia			
Ambystoma mexicanum	0.67	-0.25 - 2.72	
Rhana temporaria	0.28	-0.77 - 2.97	
Xenopus laevis	0.71	-0.25 - 2.72	

APPENDIX VI (continued): QSAR-data for freshwater and marine species, 1,2,4-trimethylbenzene

log Kow	3.85		
Molecular Weight (g)	120.2		
Species	NOEC [mg/l]	log Kow	range
Bacteria			
Clostridium botulinum	42.94	0.77 - 6.11	
Bacillus subtilus	3.85	-0.77 - 4.57	
Pseudomonas putida	10.37	-0.25 - 2.72	
Photobacterium phosphoreum	8.75	-1.31 - 4.14	
Fungi			
Saccharomonas cerevisiae	53.32	-0.77 - 1.56	
Algae			
Skeletonema costatum	7.73	1.48 - 4.60	
Scenedesmus subspicatus	2.29	0.76 - 3.53	
Selenastrum capricornutum	0.33	2.19 - 4.05	
Protozoa			
Tetrahymena pyriformis	5.25	-0.77 - 5.58	
Coelenterata			
Hydra oligactis	0.52	-0.25 - 2.72	
Mollusca			
Lymnea stagnalis	0.49	-0.25 - 2.72	
Arthropoda			
Nitocra spinipes	0.86	-0.77 - 5.13	
Daphnia magna	0.24	-0.24 - 5.18	
Aedes aegypti	0.33	-1.36 - 2.72	
Culex pipiens	0.62	-0.25 - 2.72	
Pisces			
Pimephales promelas/ Brachydanio rerio	0.24	0.46 - 5.24	
Amphibia			
Ambystoma mexicanum	0.63	-0.25 - 2.72	
Rhana temporaria	0.26	-0.77 - 2.97	
Xenopus laevis	0.67	-0.25 - 2.72	

APPENDIX VI (continued): QSAR-data for freshwater and marine species, 1,3,5-trimethylbenzene

log Kow	3.84		
Molecular Weight (g)	120.2		
Species	NOEC [mg/l]	log Kow	range
Bacteria			
Clostridium botulinum	43.76	0.77 - 6.11	
Bacillus subtilus	3.91	-0.77 - 4.57	
Pseudomonas putida	10.53	-0.25 - 2.72	
Photobacterium phosphoreum	8.89	-1.31 - 4.14	
Fungi			
Saccharomonas cerevisiae	54.29	-0.77 - 1.56	
Algae			
Skeletonema costatum	7.85	1.48 - 4.60	
Scenedesmus subspicatus	2.33	0.76 - 3.53	
Selenastrum capricornutum	0.34	2.19 - 4.05	
Protozoa			
Tetrahymena pyriformis	5.34	-0.77 - 5.58	
Coelenterata			
Hydra oligactis	0.53	-0.25 - 2.72	
Mollusca			
Lymnea stagnalis	0.50	-0.25 - 2.72	
Arthropoda			
Nitocra spinipes	0.88	-0.77 - 5.13	
Daphnia magna	0.24	-0.24 - 5.18	
Aedes aegypti	0.34	-1.36 - 2.72	
Culex pipiens	0.63	-0.25 - 2.72	
Pisces			
Pimephales promelas/ Brachydanio rerio	0.24	0.46 - 5.24	
Amphibia			
Ambystoma mexicanum	0.65	-0.25 - 2.72	
Rhana temporaria	0.27	-0.77 - 2.97	
Xenopus laevis	0.68	-0.25 - 2.72	

APPENDIX VI (continued): QSAR-data for freshwater and marine species, 1,2,3,4-tetramethylbenzene

log Kow	4.32		
Molcular Weight (g)	134.2		
Species	NOEC [mg/l]	log Kow	range
Bacteria			
Clostridium botulinum	19.74	0.77 - 6.11	
Bacillus subtilus	2.15	-0.77 - 4.57	
Pseudomonas putida	5.79	-0.25 - 2.72	
Photobacterium phosphoreum	4.68	-1.31 - 4.14	
Fungi			
Saccharomonas cerevisiae	25.59	-0.77 - 1.56	
Algae			
Skeletonema costatum	3.96	1.48 - 4.60	
Scenedesmus subspicatus	1.01	0.76 - 3.53	
Selenastrum capricornutum	0.13	2.19 - 4.05	
Protozoa			
Tetrahymena pyriformis	2.46	-0.77 - 5.58	
Coelenterata			
Hydra oligactis	0.23	-0.25 - 2.72	
Mollusca			
Lymnea stagnalis	0.22	-0.25 - 2.72	
Arthropoda			
Nitocra spinipes	0.42	-0.77 - 5.13	
Daphnia magna	0.09	-0.24 - 5.18	
Aedes aegypti	0.11	-1.36 - 2.72	
Culex pipiens	0.27	-0.25 - 2.72	
Pisces			
Pimephales promelas/ Brachydanio rerio	0.10	0.46 - 5.24	
Amphibia			
Ambystoma mexicanum	0.27	-0.25 - 2.72	
Rhana temporaria	0.09	-0.77 - 2.97	
Xenopus laevis	0.28	-0.25 - 2.72	

APPENDIX VI (continued): QSAR-data for freshwater and marine species, 1,2,3,5-tetramethylbenzene

log Kow	4.39		
Molcular Weight (g)	134.2		
Species	NOEC [mg/l]	log Kow	range
Bacteria			
Clostridium botulinum	17.30	0.77 - 6.11	
Bacillus subtilus	1.94	-0.77 - 4.57	
Pseudomonas putida	5.23	-0.25 - 2.72	
Photobacterium phosphoreum	4.19	-1.31 - 4.14	
Fungi			
Saccharomonas cerevisiae	22.57	-0.77 - 1.56	
Algae			
Skeletonema costatum	3.52	1.48 - 4.60	
Scenedesmus subspicatus	0.88	0.76 - 3.53	
Selenastrum capricornutum	0.11	2.19 - 4.05	
Protozoa			
Tetrahymena pyriformis	2.17	-0.77 - 5.58	
Coelenterata			
Hydra oligactis	0.20	-0.25 - 2.72	
Mollusca			
Lymnea stagnalis	0.19	-0.25 - 2.72	
Arthropoda			
Nitocra spinipes	0.37	-0.77 - 5.13	
Daphnia magna	0.07	-0.24 - 5.18	
Aedes aegypti	0.10	-1.36 - 2.72	
Culex pipiens	0.24	-0.25 - 2.72	
Pisces			
Pimephales promelas/ Brachydanio rerio	0.09	0.46 - 5.24	
Amphibia			
Ambystoma mexicanum	0.24	-0.25 - 2.72	
Rhana temporaria	0.07	-0.77 - 2.97	
Xenopus laevis	0.24	-0.25 - 2.72	

APPENDIX VI (continued): QSAR-data for freshwater and marine species, 1,2,4,5-tetramethylbenzene

log Kow	4.1
Molcular Weight (g)	134.2

Species	NOEC [mg/l]	log Kow range
Bacteria		
Clostridium botulinum	29.91	0.77 - 6.11
Bacillus subtilus	2.98	-0.77 - 4.57
Pseudomonas putida	8.01	-0.25 - 2.72
Photobacterium phosphoreum	6.60	-1.31 - 4.14
Fungi		
Saccharomonas cerevisiae	38.00	-0.77 - 1.56
Algae		
Skeletonema costatum	5.70	1.48 - 4.60
Scenedesmus subspicatus	1.56	0.76 - 3.53
Selenastrum capricornutum	0.21	2.19 - 4.05
Protozoa		
Tetrahymena pyriformis	3.70	-0.77 - 5.58
Coelenterata		
Hydra oligactis	0.36	-0.25 - 2.72
Mollusca		
Lymnea stagnalis	0.33	-0.25 - 2.72
Arthropoda		
Nitocra spinipes	0.62	-0.77 - 5.13
Daphnia magna	0.15	-0.24 - 5.18
Aedes aegypti	0.20	-1.36 - 2.72
Culex pipiens	0.42	-0.25 - 2.72
Pisces		
Pimephales promelas/ Brachydanio rerio	0.16	0.46 - 5.24
Amphibia		
Ambystoma mexicanum	0.43	-0.25 - 2.72
Rhana temporaria	0.15	-0.77 - 2.97
Xenopus laevis	0.44	-0.25 - 2.72

APPENDIX VI (continued): QSAR-data for freshwater and marine species, 1,1-dichloorethaan

log(kow)	1.79		
MW(g)	98.95		
-	-	- -	-
Species	NOEC [mg/l]	log Kow range	
-	-	- -	-
Bacteria			
Clostridium botulinum	1728.29	0.77 -	6.11
Bacillus subtilus	66.04	-0.77 -	4.57
Pseudomonas putida	177.75	-0.25 -	2.72
Photobacterium phosphoreum	181.22	-1.31 -	4.14
Fungi			
Saccharomonas cerevisiae	1775.07	-0.77 -	1.56
Algae			
Skeletonema costatum	193.47	1.48 -	4.60
Scenedesmus subspicatus	111.18	0.76 -	3.53
Selenastrum capricornutum	31.29	2.19 -	4.05
Protozoa			
Tetrahymena pyriformis	192.05	-0.77 -	5.58
Coelenterata			
Hydra oligactis	25.47	-0.25 -	2.72
Mollusca			
Lymnea stagnalis	23.77	-0.25 -	2.72
Arthropoda			
Nitocra spinipes	28.79	-0.77 -	5.13
Daphnia magna	27.15	-0.24 -	5.18
Aedes aegypti	48.34	-1.36 -	2.72
Culex pipiens	29.92	-0.25 -	2.72
Pisces			
Pimephales promelas/ Brachydanio rerio	12.25	0.46 -	5.24
Amphibia			
Ambystoma mexicanum	33.90	-0.25 -	2.72
Rhana temporaria	37.52	-0.77 -	2.97
Xenopus laevis	39.30	-0.25 -	2.72
-	-	- -	-

APPENDIX VI (continued): QSAR-data for freshwater and marine species, 1,2-dichlooretheen

log(kow)	1.18		
MW(g)	96.94		
-	-	- -	-
Species	NOEC [mg/l]	log Kow range	
-	-	- -	-
Bacteria			
Clostridium botulinum	5356.77	0.77 -	6.11
Bacillus subtilus	158.97	-0.77 -	4.57
Pseudomonas putida	427.86	-0.25 -	2.72
Photobacterium phosphoreum	461.43	-1.31 -	4.14
Fungi			
Saccharomonas cerevisiae	5201.19	-0.77 -	1.56
Algae			
Skeletonema costatum	521.08	1.48 -	4.60
Scenedesmus subspicatus	364.50	0.76 -	3.53
Selenastrum capricornutum	124.88	2.19 -	4.05
Protozoa			
Tetrahymena pyriformis	578.77	-0.77 -	5.58
Coelenterata			
Hydra oligactis	83.50	-0.25 -	2.72
Mollusca			
Lymnea stagnalis	77.93	-0.25 -	2.72
Arthropoda			
Nitocra spinipes	84.35	-0.77 -	5.13
Daphnia magna	114.63	-0.24 -	5.18
Aedes aegypti	218.93	-1.36 -	2.72
Culex pipiens	98.11	-0.25 -	2.72
Pisces			
Pimephales promelas/ Brachydanio rerio	40.73	0.46 -	5.24
Amphibia			
Ambystoma mexicanum	114.31	-0.25 -	2.72
Rhana temporaria	169.94	-0.77 -	2.97
Xenopus laevis	136.30	-0.25 -	2.72
-	-	- -	-

APPENDIX VI (continued): QSAR-data for freshwater and marine species, methyl-t-butylether

log(kow)	0.940		
MW(g)	88.150		
-	-	- -	-
Species	NOEC [mg/l]	log Kow range	
-	-	- -	-
Bacteria			
Clostridium botulinum	7663.415	0.77 -	6.11
Bacillus subtilus	205.884	-0.77 -	4.57
Pseudomonas putida	554.144	-0.25 -	2.72
Photobacterium phosphoreum	610.973	-1.31 -	4.14
Fungi			
Saccharomonas cerevisiae	7278.172	-0.77 -	1.56
Algae			
Skeletonema costatum	705.379	1.48 -	4.60
Scenedesmus subspicatus	533.117	0.76 -	3.53
Selenastrum capricornutum	197.343	2.19 -	4.05
Protozoa			
Tetrahymena pyriformis	818.884	-0.77 -	5.58
Coelenterata			
Hydra oligactis	122.130	-0.25 -	2.72
Mollusca			
Lymnea stagnalis	113.978	-0.25 -	2.72
Arthropoda			
Nitocra spinipes	118.038	-0.77 -	5.13
Daphnia magna	185.192	-0.24 -	5.18
Aedes aegypti	363.599	-1.36 -	2.72
Culex pipiens	143.490	-0.25 -	2.72
Pisces			
Pimephales promelas/ Brachydanio rerio	59.899	0.46 -	5.24
Amphibia			
Ambystoma mexicanum	169.053	-0.25 -	2.72
Rhana temporaria	282.242	-0.77 -	2.97
Xenopus laevis	203.809	-0.25 -	2.72
-	-	- -	-

APPENDIX VII: References

Abernathy, S., A.M. Bobra, W.Y. Shiu, P.G. Wells, and D. Mackay (1986) Acute lethal toxicity of hydrocarbons and chlorinated hydrocarbons to two planktonic crustaceans: The key role of organism-water partitioning. Aquat. Toxicol., 8, 163-174.

Adema, D.M.M. (1978) Daphnia magna as a test animal in acute and chronic toxicity tests. Hydrobiologia, 59, 2, 125-134.

Adema, D.M.M. and G.J. Vink (1981) A comparative study of the toxicity of 1,1,2-trichloroethane, dieldrin, pentachlorophenol and 3,4-dichloroaniline for marine and fresh water organisms. Chemosphere, 10, 6, 533-554.

Adriano, D.C., D. I. Kaplan, W.G. Burkman, and G.L. Mills (1988) Long-term phytoavailability of soil-applied organo-borates. J. Environ. Qual. 17, 485-492.

Al-Khafagi, A.A., and M.A. Tabatabai (1979) Effects of trace elements on arylsulfatase activity in soils. Soil Science 127 (3), 129-133.

Anonymus (1991) Bund/Länder Arbeitskreis "Qualitätsziele" (BLAKQZ).

Antia, N.J., and J.Y. Cheng (1975) Culture studies on the effects from borate pollution on the growth of marine phytoplankters. J. Fish. Res. Can. 32 (2), 2487-2494.

Bailey, H.C., D.H.W. Liu, and H.A. Javitz (1985) Time/toxicity relationships in short-term static, dynamic and plug-flow bioassays. In: Aquatic Toxicology and Hazard Assessment: Eighth Symposium, ASTM STP 891., Bahner, R.C., D.J. Hansen, eds., Philadelphia, 193-212

Bengtsson, B.E., L. Renberg, and M. Tarkpea (1984) Molecular structure and aquatic toxicity - an example with C1 - C13 aliphatic alcohols. Chemosphere, 13, (5/6), 613-622.

Berthet, B., J.C. Amiard, C. Amiard-Triquet, M. Martoja, and A.Y. Jeantet (1992) Bioaccumulation, toxicity and physico-chemical speciation of silver in bivalve molluscs: ecotoxicological and health consequences. Sci. Total Environ., 125, 97-122.

Bills, T.D., L.L. Marking, and J.H. Chandler, Jr. (1977) Formalin: Its toxicity to nontarget aquatic organisms, persistence, and counteraction. Investigation in fish control. Bureau of Sport Fisheries and Wildlife. Fish and Wildlife Service, US Department of the Interior. Washington DC, vol 00073, 1-7.

Bobra, A.M., W.Y. Shiu, and D. Mackay (1983) A predictive correlation for the acute toxicity of hydrocarbons and chlorinated hydrocarbons to the water flea (Daphnia magna). Chemosphere, 12, (9/10), 1121-1129.

Bockting, G.J.M., E.J. van de Plassche, J. Struijs and H. Canton (1993) Soil-water partition coefficients for organic compounds. National Institute of Public Health and Environmental Protection, Bilthoven, The Netherlands. Report no. 679101 013.

Brenniman, G., R. Hartung, and W.J. Weber (1976) A continuous flow bioassay method to evaluate the effects of outboard motor exhausts and selected aromatic toxicants on fish. Water Res., 10, 165-169.

Bridie, A.L., C.J.M. Wolff, and M. Winter (1979) The acute toxicity of some petrochemicals to goldfish. Water Res., 13, 623-626.

Bringmann, G (1978) Bestimmung der biologischen Schadwirkung wassergefaehrdender Stoffe gegen Protozoen. I. Bakterienfressende Flagellaten (Modellorganismus Entosiphon sulcatum Stein) Z. f. Wasser- und Abwasser Forsch., 11, (6), 210-215

Bringmann, G. and R. Kühn (1976) Grenzwerte der schadwirkung wassergefahrender Stoffe gegen Bakterien (Pseudomonas putida) und Grunalgen (Scenedesmus quadricauda) im Zellenverhmerungstest. Z. Wasser Abwasser Forsch. 10 (3-4), 87-98.

Bringmann, G. and R. Kühn (1976) Vergleichende Befunde der Schadwirkung wasserefährdender Stoffe gegen Bakterien (*Pseudomonas putida*) und Blaualgen (*Microcystis aeruginosa*) Gwf-wasser/abwasser 117 (9) 410-413.

Bringmann, G. and R. Kühn (1977) Befunde der schadwirkung wassergefahrender Stoffe gegen Daphnia magna. Z. Wasser Abwasser Forsch. 10, 161-166.

Bringmann, G. and R. Kühn (1978) Testing of substances for their toxicity threshold: model organisms Microcystis (diplocystis) aeruginosa and Scenedesmus quadricauda. Mitt. Internat. Verein. Limnol., 21, 275-284.

Bringmann, G. and R. Kühn (1980a) Comparison of the toxicity thresholds of water pollutants to bacteria, algae, and protozoa in the cell multiplication inhibition test. Water Res., 14, 231-241.

Bringmann, G. and R. Kühn (1980b) Bestimmung der biologische Schadwirkung wassergefährender Stoffe gegen Protozoen II. Bakterienfressenden Ciliaten. Z. f. Wasser- und Abwasser-Forsch., 13, (1), 26-31.

Bringmann, G. and R. Kühn (1982) Ergebnisse der Schadwirkung wassergefaehrdender Stoffe gegen Daphnia magna in einem weiterenentwickelten standardisierten Testverfahren. Z. Wasser Abwasser Forsch. 15, (4), 1-6.

Bringmann, G., R. Kühn, and A. Winter (1980) Bestimmung de biologischen Schadwirkung wassergefährenden Stoffe gegen Protozoen III. Saprozoische Flagellaten. Z. Wasser Abwasser Forsch. 13 (5), 170-173.

Brooke, L.T., D.J. Call, D.L. Geiger, and C.E. Northcott (1984) Acute toxicities of organic chemicals to fathead minnows *(Pimephales promelas)* Center for Lake Superior Environmental Studies, University of Wisconsin-Superior, volume 1.

Buccafusco, R.J., S.J. Ells, and G.A. LeBlanc (1981) Acute toxicity of priority pollutants to bluegill (Lepomis macrochirus). Bull. Environ. Contam. Toxicol., 26, 446-452.

Buhl, K., and S.J. Hamilton (1991) Relative sensitivity of early life stages of arctic grayling, coho salmon, and rainbow trout to nine inorganics. Ecotoxicol. Environ. Saf., 22, 184-197.

Buikema Jr, A.L., J. Cairns Jr., and G.W. Sullivan (1974) Evaluation of Philodina acuticornis (rotifera) as a bioassay organism for heavy metals. Water Resources Bull. 10, (4), 648-661.

Bulich, A.A., M.W. Greene, and D.L. Isenberg (1981) Reliability of the bacterial luminescence assay for determination of the toxicity of pure compounds and complex effluents. Aquat. Toxicol. Hazard Assessm.: Fourth Conference. ASTM STP 737, 338-347.

Calabrese, A., J.R. MacInnes, D.A. Nelson, R.A. Greig, and P.P. Yevich (1984) Effects of long-term exposure to silver or copper on growth, bioaccumulation and histopathology in the blue mussel Mytilus edulis. Mar. Environ. Res., 11, 253-274.

Caldwell, R.S. (1976) Effects of seawater-soluble fraction of cook inlet crude oil and its major aromatic components on larval stages of the dungeness crab, *Cancer magister dana.* In: D.A. Wolfe (ed.) Fate end effects of petroleum hydrocarbons in marine organisms and ecosystems, Pergamon press, New York, 210-220.

Chiou, C.T., L.J. Peters and V.H. Freed (1979) A physical concept of soil-water equilibria for nonionic organic compounds. Science, 206, 831-832.

Cruz, E.R., and C.L. Pitogo (1989) Tolerance level and histopathological response of Milkfish (Chanos chanos) fingerlings to formalin. Aquacult., 78, 135-145

Curtis, C., A. Lima, S.J. Lozano and G.D. Veith (1982) Evaluation of a bacterial bioluminescence bioassay as a method for predicting acute toxicity of organic chemicals to fish. ASTM STP 766. Amer. Soc. Testing and Materials. 170-178.

Davies, P.H., J.P. Goettl, Jr. and J.R. Sinley (1978) Toxicity of silver to rainbow trout (Salmo gairdneri). Water Res., 12, 113-117.

Dawson, G.W., A.L. Jennings, D. Drozdowski, and E. Rider 1975/77 The acute toxicity of 47 industrial chemicals to fresh and saltwater fishes. J. Hazardous Materials, 1, 303-318.

De Zwart, D. and W. Slooff (1987) Toxicity of mixtures of heavy metals and petrochemicals to xenopus laevis. Bull. Environ. Contam. Toxicol., 38, 345-351.

Deneer, J.W., W. Seinen, and J.L.M. Hermens (1988) The acute toxicity of aldhydes to the guppy. Aquat. Toxicol., 12, 185-192.

Denneman, C.A.J., C.A.M. van Gestel (1990) Bodemverontreiniging en bodemecosystemen: voorstel voor C-(toetsings)waarden op basis van ecotoxicologische risico's. Rijksinstituut voor Volksgezondheid en Milieuhygiene, Bilthoven. Rapportnr. 725201001 met bijlage.

Geiger, D.L., C.E. Northcott, D.J. Call, and L.T. Brooke (1985) Acute toxicities of organic chemicals to fathead minnows (*Pimephales promelas*). Center for Lake Superior Enviromental Studies, University of Wisconsin-Superior, volume 2.

Geiger, D.L., L.T. Brooke, and D.J. Call (1988) Acute toxicities of organic chemicals to fathead minnows (*Pimephales promelas*). Center for Lake Superior Enviromental Studies, University of Wisconsin-Superior, volume 4.

Geiger, D.L., S.H. Poirier, L.T. Brooke, and D.J. Call (1986) Acute toxicities of organic chemicals to fathead minnows (*Pimephales promelas*). Center for Lake Superior Enviromental Studies, University of Wisconsin-Superior, volume 3.

Gersich, F.M (1984) Evaluation of a static renewal chronic toxicity test method for *Daphnia magna* straus using boric acid. Environ. Toxicol. Chem., 3, 89-94.

Gersich, F.M. and M.A. Mayes (1986) Acute toxicity tests with Daphnia magna straus and Pimephales promelas Rafinesque in support of national pollutant discharge elimination permit requirements. Water Res., 20, (7), 929-941.

Gersich, F.M., F.A. Blanchard, S.L. Applegath, and C.N. Park (1986) The precision of Daphnid (Daphnia magna Straus, 1820) static acute toxicity tests. Arch. Environ. Contam. Toxicol., ? , 741-749

Gerstl, Z. and C.S. Helling (1987) Evaluation of molecular connectivity as a predictive method for the adsorption of pesticides by soils. J. Environ. Sci. Health., B22, 55-69.

Gestring, W.D., and P.N. Soltanpour (1987) Comparison of soil tests for assessing boron toxicity to alalfa. Soil Sci. Soc. Am. J. 51, 1214-1219.

Gledhill, W.E., V.W. Saeger, and M.L. Trehy (1991) An aquatic environmental safety assessment of linear alkylbenzene. Environ. Toxicol. Chem., 10, 169-178.

Grathwohl, P (1990) Influence of organic matter from soils and sediments from various origins on the sorption of some chlorinated aliphatic hydrocarbons: Implications and Koc correlations Environ. Sci. Technol., 24 (11), 1687-1693.

Hall, L.H. E.L. Maynard, and L.B. Kier (1989) QSAR investigation of benzene toxicity to fathead minnow using molecular connectivity. Environ. Toxicol. Chem., 8, 783-788.

Hall, L.W. Jr., and A.E. Pinkney (1985) Acute and sublethal effects of organotin compounds on aquatic biota: an interpretative literature evaluation. Crit. Rev. Toxicol., 14, (20), 159-209.

Hans, R.K., R.C. Gupta, M.U. Beg (1990) Toxicity assessment of four insecticides to earthworm Pheritima posthuma. Bull. Environ. Contam. Toxicol., 45, 358-364

Heitmuller, P.T., T.A. Hollister, and P.R. Parrish (1981) Acute toxicity of 54 industrial chemicals to sheepshead minnows (Cyprinodon variegatus). Bull. Environ. Contam. Toxicol., 27, 596-604.

Henderson, C., Q.H. Pickering, and A.E. Lemke (1961) The effect of some organic cyanides (nitriles) on fish. Proc. 15th Ind. Waste Conf. Purdue Univ. 45, 120-130.

Hermens, J., F. Busser, P. Leeuwangh, and A. Musch (1985) Quantitive structure-activity relationships and mixture toxicity of organic chemicals in photobacterium phosphoreum: the microtox test. Ecotoxicol. Environ. Saf., 9, 17-25.

Hermens, J., H. Canton, P. Janssen, and R. de Jong (1984) Quantitative structure-activity relationships and toxicity studies of mixtures of chemicals with anaesthetic potency: Acute lethal and sublethal toxicity to Daphnia magna. Aquat. Toxicol., 5, 143-154.

Hiraoka, Y., S. Ishizawa, T. Kamada, and H. Okuda (1985) Acute toxicity of 14 different kinds of metals affecting medaka fry. Hiroshima J. Med. Sci. 34, (3), 327-330.

Holcombe, G.W., G.L. Phipps, A.H. Sulaiman, and A.D. Hoffman (1987) Simultaneous multiple species testing: acute toxicity of 13 chemicals to 12 diverse freshwater amphibian, fish, and invertebrate families. Arch. Environ. Contam. Toxicol., 16, 697-710.

Holcombe, G.W., G.L. Phipps, and J.T. Fiandt (1983) Toxicity of selected priority pollutants to various aquatic organisms. Ecotoxicol. Environ. Saf., 7, 400-409.

Holm, g., L. Norrgren, and O. Linden (1991) Reproductive and hisopathological effects of long-term experimental exposure to bis(tributyltin)oxide (TBTO)on the three-spined stickleback, *Gasterosteus aculeatus* Linnaeus. J. Fish Biol. 38, 373-386.

Huang, J-C., and H. Ganjidoost (1990) Predictive models for VOC partitions in soils Proc. Ind. Waste Conf., 44, 23-32.

Huang, J-C., B.A. Dempsey, S-Y. Chang, and H. Ganjidoost (1987) Uptake and release of hazardous chemicals by soil materials Proc. Ind. Waste Conf., 41, 390-400.

Hutchinson, T.C., J.A. Hellebust, D. Tam, D. Mackay, R.A. Mascarenhas, and W.Y. Shiu (1980) The correlation of the toxicity to algae of hydrocarbons and halogenated hydrocarbons with their physical-chemical properties. In: Hydrocarbon and halogenated hydrocarbons in the aquatic environment. Afghan, B.K. and D. Mackay (eds), Plenum Press, New York. p.577-586

Jones, K.C., B.E. Davies, and P.J. Peterson (1986) Silver in Welsh soils: Physical and chemical distribution studies Geoderma, 37, 157-174.

Juhnke, I. and D. Lüdemann (1978) Ergebnisse der untersuchung von 200 chemischen verbindungen auf akute fischtoxizitat mit dem goldorfentest. Z.f. Wasser-Abwasser-Forschung, 5, 161-164.

Kaplan, D.I., K.S. Sajwan, D.C. Adriano, and S. Gettier (1990) Phytoavailability and toxicity of beryllium and vanadium. Water, Air and Soil Pollution, 53, 203-212.

Kenaga, E.E. (1980) Predicted bioconcentration factors and soil sorption coefficients of pesticides and other chemicals. Ecotoxicol. Environ. Saf., 4, 26-38.

Khangarot, B.S. (1991) Toxicity of metals to a freshwater tubificid worm, Tubifex tubifex (Muller). Bull. Environ. Contam. Toxicol. 46, 906-912.

Khangarot, B.S., and P.K. Ray (1989) Sensitivity of midge larvae of Chironomus tentans Fabricius (Diptera Chironomidae) to heavy metals. Bull. Environ. Contam. Toxicol. 42, 325-330.

Khangarot, B.S., P.K. Ray, and H. Chandra (1987) Daphnia magna as a model to assess heavy metal toxicity: Comparative assessment with mouse system. Acta Hydrochim. Hydrobiol. 15, (4), 427-432.

Kuehn, R. and M. Pattard (1990) Results of the harmful effects of water pollutants to green algae (Scenedesmus subspicatus) in the cell multiplication inhibition test. Water Res., 24, (1), 31-38.

Kuehn, R., M. Pattard, K.D. Pernak and A. Winter (1989) Results of the harmful effects of water pollutants to Daphnia magna in the 21-day reproduction test. Water Res., 23, (4), 501-510.

LeBlanc, G.A. (1980) Acute toxicity of priority pollutants to water flea (Daphnia magna). Bull. Environ. Contam. Toxicol., 24, 684-691.

LeBlanc, G.A. (1984) Interspecies relationships in acute toxicity of chemicals to aquatic organisms. Environ. Toxicol. Chem. 3, 47-60.

Lewis, M.A., and L.C. Valentine (1981) Acute and chronic toxicities of boric acid to *Dphnia magna* straus. Bull. Environ. Contam. Toxicol. 27, 309-315.

Liang, C.N., and M.A. Tabatabai (1977) Effects of trace elements on nitrogen mineralization in soils. Environ. Pollut. 12, 141-147.

Liang, C.N., and M.A. Tabatabai (1978) Effects of trace elements on nitrification in soils. J. Environ. Qual. 7 (2), 291-293.

Lokke, H (1984) Leaching of ethylene glycol and ethanol in subsoils. Water, Air, and Soil Pollut., 22, 373-387.

Maier, K.J., and A.W. Knight (1991) The toxicity of waterborne boron to *Daphnia magna* and *Chironomus decorus* and the effects of water hardness and sulfate on boron toxicity. Arch. Environ. Contam. Toxicol. 20, 282-287.

Martin, T.R., and D.M. Holdich (1986) The acute lethal toxicity of heavy metals to peracarid crustaceans (with particular reference to freshwater asellids and gammarids). Water Res. 20, (9), 1137-1147.

Mayer, F.L.Jr., and M.R. Ellersieck (1986)Manual on acute toxicity: Interpretation and data base for 410 chemicals and 66 species of freshwater animals. U.S. Fish Wildl. Serv. Resour. Publ., 160, 579 pp.

Mayes, M.A., H.C. Alexander, and D.C. Dill (1983) A study to assess the influence of age on the response of fathead minnows in static acute toxicity tests. Bull. Environ. Contam. Toxicol., 31, 139-147.

Meent, D. van de, T. Aldenberg, J.H. Canton, C.A.M. van Gestel en W. Slooff (1990) Streven naar waarden. Achtergrondstudie ten behoeve van de nota "Milieukwaliteitsnormering water en bodem. Rijksinstituut voor volksgezondheid en milieuhygiene, Bilthoven. Rapportnr. 670101 001 met bijlage.

Metayer, C., C. Amiard-Triquet, and J.P. Baud (1990) Species-related variations of silver bioaccumulation and toxicity to three marine bivalves. Water Res., 24, (8), 995-1001.

Nebeker, A.V., C.K. McAuliffe, R. Mshar, and D.G. Stevens (1983) Toxicity of silver to steelhead and rainbow trout, fathead minnows and Daphnia magna. Environ. Toxicol. Chem., 2, 95-104.

Nell, J.A., and R. Chvojka (1992) The effect of bis-tributyltin oxide (TBTO) and copper on the growth of juvenilde Sydney rock oysters *Saccostrea commercialis* (Iredale and Roughley) and Pacific oysters *Crassostrea gigas* Thunberg. Sci. Total Environ. 125, 193-201.

Okkerman, P.C., F. Noppert, and F. Balk (1992) Bijlage basisducument dioxinen (RIVM-rapport 710401.024) ad hoofdstuk 5 (effecten): Ecotoxiciteit and toxiciteit voor landbouwhuisdieren.

Ollinger, W.M., and R.C. Ahler (1988) Sorption of 2,4-dichlorophenol and 1,1,1-trichloroethane onto three soils Proc. Ind. Waste Conf., 42, 781-785.

Perez Mateos, M., and S. Gonzalez Carcedo (1988) Influence of heavy metals on soil oxidoreductases. Biol. Agric. Hortic., 5, 135-142.

Pignatello, J.J. (1990) Slowly reversible sorption of aliphatic halocarbons in soils. I. Formation of residual fractions Environ. Toxicol. Chem., 9, 1107-1115.

Pill, K.G., G.E. Kupillas, F.W. Picardal, and R.G. Arnold (1991) Estimating the toxicity of chlorinated organic compounds using a multiparameter bacterial bioassay. Environ. Toxicol. Water Qual. Internat. J., 6, 271-291.

Plassche E.J. van de, M.D. Polder, and J.H. Canton (1993) Derivation of maximum permissible concentrations for several volatile compounds for water and soil. National Institute of Public Health and Environmental Protection, Bilthoven, The Netherlands. Report no. 679101 008.

Plassche, E.J. van de (1994) Towards integrated environmental quality objectives for several compounds with a potential for secondary poisening. National Institute of Public Health and Environmental Protection, Bilthoven, The Netherlands. Report no. 679101 012.

Plassche, E.J. van de, M.D. Polder, and J.H. Canton (1992) Maximum permissible concentration for water, sediment and soil derived from toxicity data for nine trace metals. National Institute of Public Health and Environmental Protection, Report no. 679101 002.

Podoll, R.T., K.C. Irwin and S. Brendlinger (1987) Sorption of water-soluble oligomers on sediments. Environ. Sci. Technol. 21(6): 562-568.

Poirier, S.H., M.L. Knuth, C.D. Anderson-Buchou, L.T. Brooke, A.R. Lima, and P.J. Shubat (1986) Comperative toxicity of methanol and N,N-dimethylformamide to freshwater fish and invertebrates. Bull. Environ. Contam. Toxicol., 37, 615-621.

Rajini, P.S., M.K. Krishnakumari, and S.K. Majumder (1989) Cytotoxicity of certain organic solvents and organophophorus insecticides to the ciliated protozoan Paramecium caudatum. Microbios, 59, 157-163.

Randall, T.L., and P.V. Knopp (1980) Detoxification of specific organic substances by wet oxidation. J. Water Pollut. Control Fed., 52, (8), 2117-2130.

Reardon, I.S., and R.M. Harrell (1990) Acute toxicity of formalin and copper sulfate to striped bass fingerlings held in varying salinities. Aquacult., 87, 255-270.

Richter, J.E., S.F. Peterson, and C.F. Kleiner (1983) Acute and chronic toxicity of some chlorinated benzenes, chlorinated ethanes, and tetrachloroethylene to Daphnia magna. Arch. Environ. Contam. Toxicol., 12, 679-684.

Riley, M.M (1987) Boron toxicity in barley. J. Plant. Nutrit. 10 (9-16), 2109-2115.

Robertson, S.M., A.L. Lawrence, W.H. Neill, C.R. Arnold, and G. McCarty 1988 Toxicity of the cryoprotectants glycerol, dimethylsulfoxide, ethylene glycol, methanol, sucrose, and sea salt solutions to the embryos of the red drum. Prog. Fish-Cult., 50, 148-154.

Rogers, J.E., and S.W. Li (1985) Effect of metals and other inorganic ions on soil microbial activity: soil dehydrogenase assay as a simple toxicity test. Bull. Environ. Contam. Toxicol. 34, 858-865.

Rogerson, A., W.Y. Shiu, G.L. Huang, D. Mackay, and J. Berger (1983) Determination and interpretation of hydrocarbon toxicity to ciliate protozoa. Aquat. Toxicol., 3, 215-228.

Sabljic, A. (1987) On the prediction of soil sorption coefficients of organic pollutants from molecular structure: Application of molecular topology model. Environ. Sci. Technol., 21, (4), 358-366.

Schwarzenbach, R.P. and J. Westall (1981) Transport of nonpolar organic compounds from surface water to groundwater. Laboratory sorption studies. Environ. Sci. Technol., 15, (11), 1360-1367.

Smith, A.D., A. Bharath, C. Mallard, D. Orr, K. Smith, J.A. Sutton, J. Vukmanich, L.S. McCarty, and G.W. Ozburn (1991) The acute and chronic toxicity of ten chlorinated organic compounds to the american flagfish (Jordanella floridae). Arch. Environ. Contam. Toxicol., 20, 94-102.

Stratton, G.W (1990) Effects of the insecticide endosulfan on nitrification in low pH agricultural soils. Toxicity Assessment, 5, 319-336

Stratton, G.W. (1987) Toxic effects of organic solvents on the growth of blue-green algae. Bull.Environ. Contam. Toxicol., 38, 1012-1019.

Stratton, G.W., and T.M. Smith (1988) Interaction of organic solvents with the Green Alga chlorella pyrenoidosa. Bull. Environ. Contam. Toxicol., 40, 736-742.

Stromgren, T., and T. Bongard (1987) The effect of tributyltin oxide on growth of *Mytilus edulis*. Marine Pollut. Bull. 18 (1), 30-31.

Tabatabai M.A. (1977) Effects of trace elements on urease activity in soils. Soil Biol. Biochem. 9, 9-13.

Thompson, R.S. and N.G. Carmichael (1989) 1,1,1-trichloroethane: medium-term toxicity to carp, daphnids, and higher plants. Ecotoxicol. Environ. Saf., 17, 172-182.

Vaishnav, D.D., and E.T. Korthals (1990) Comperative toxicities of selected industrial chemicals to Microorganisms and other aquatic organisms. Arch. Environ. Contam. Toxicol., 19, 624-628.

Veith, G.D., D.J. Call, and L.T. Brooke (1983) Structure-toxicity relationships for the fathead minnow, Pimephales promelas: Narcotic industrial chemicals. Can. J. Aquat. Sci., 40, 743-748.

Verkeer en Waterstaat, Ministerie van (1992) Directoraat-Generaal Rijkswaterstaat. Watersysteemverkenningen.

Walbridge, C.T., J.T. Fiandt, G.L. Phipps, and G.W. Holcombe (1983) Acute toxicity of ten chlorinated aliphatic hydrocarbons to the fathead minnow (Pimephales promelas). Arch. Environ. Contam. Toxicol., 12, 661-666.

Walton, B.T., A.S. Hendricks, T.A. Anderson, W.H. Griest, R. Merriweather, J.J. Beauchamp, and C.W. Francis (1992) Soil sorption of volatile and semivolatile organic compounds in a mixture J. Environ. Qual., 21, 552-558.

Wellens, H (1982) Vergleich der Empfindlichkeit von Brachydanio rerio und Leuciscus idus bei der Untersuchung der Fischtoxizitaet von chemischen Verbindungen und Abwaessern. Wasser Abwasser Forsch. 15, (2), p. 49-52.

Williams, P.L., and D.B. Dusenbery (1990) Aquatic toxicity testing using the nematode, Caenorhabditis elegans. Environ. Toxicol. Chem. 9, 1285-1290.

Wolf, W. de, J.H. Canton, J.W. Deneer, R.C.C. Wegman, and J.L.M. Hermens (1986) Qauntitative structure-activity relationships and mixture-toxicity studies of alcohols and chlorohydrocarbons: reproducibility of effects on growth and reproduction of *Daphnia magna*. Aquat. Toxicol., 12, 39-49.